Company Profile

Larson Electronic Glass produces state of the art glass-to-metal seals. Components of unsurpassed quality have been supplied to government facilities, science departments of colleges and universities, and independent laboratories around the world since 1954. Applications include vacuum systems, including ultra high vacuum, and a wide variety of other devices and equipment.

While the company is best known for custom and one-of-a-kind prototype work this catalog includes a greatly expanded line of off-the-shelf standard glass-to-metal products. Product categories include Viewports, Tubular seals, Bellows seals, and Fiberoptic and Electrical Feedthrus.

To insure high quality standards, 90% of the manufacturing process is done in the company's own plant. This also enables Larson personnel to continue developing and refining the art of glass-to-metal sealing. An extensive inventory of raw materials is maintained to facilitate the timely shipment of orders.

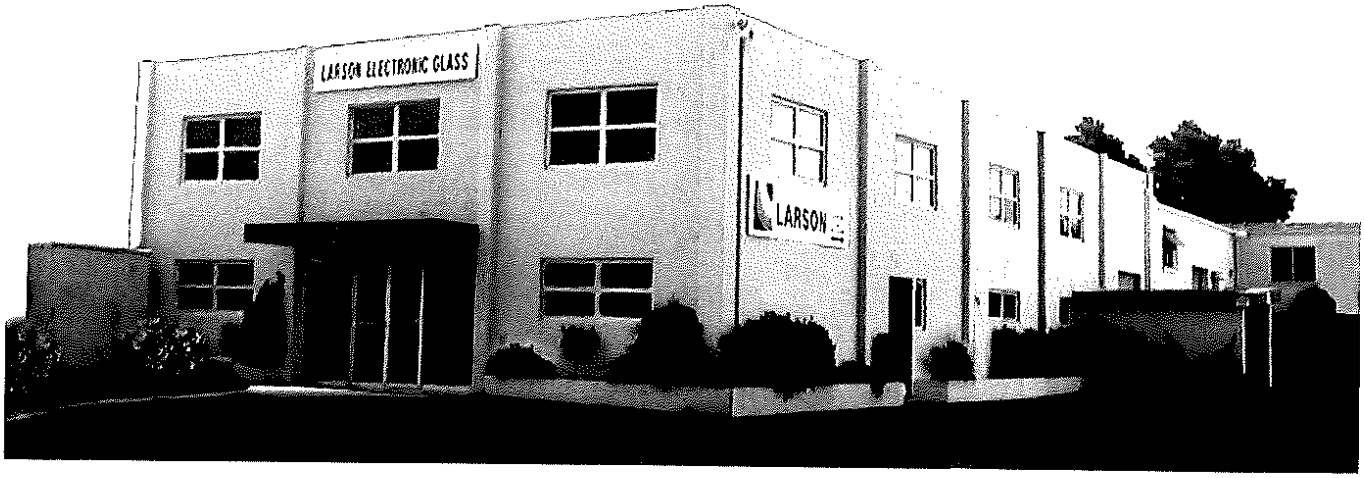

LARSON
ELECTRONIC GLASS

2840 Bay Rd. - P.O. Box 371
Redwood City, Ca 94064
Phone: 650-369-6734
Fax: 650-369-0728
E-mail: sales@larsonelectronicglass.com

Visit our web-site at: www.larsonelectronicglass.com

LARSON
ELECTRONIC GLASS

Contents

Index

Terms and Conditions

FOB Point

All shipments are FOB Redwood City, California 94064 (Export: Ex Factory) unless otherwise quoted.

Shipment

Stock items are normally shipped within one week of receipt of order. Items not in stock will normally be shipped within three weeks. An estimated shipping date will be established for custom items.

Delivery

Method of shipment will normally be via UPS prepay and bill if credit has been established. Otherwise, shipment will be via UPS collect. Other methods of shipment may be specified by customer.

Terms of Payment

Major credit cards. Net 30 days with established credit. Export orders require prepayment unless other terms are arranged.

Discounts

OEM and Quantity Discounts are available in some situations. Contact factory.

Notes

- Please order by Model Number.
- Minimum order is $50.00.
- Prices are subject to change without notice.
- Specifications are subject to change without notice.
- Equivalent glass may be substituted.

Limited Warranty

All products manufactured by Larson Electronic Glass are warranted to be free from defects in materials and workmanship for a period of twelve (12) months from the date of shipment by Larson Electronic Glass to the buyer. Liability under this warranty is expressly limited to repair or replacement of defective products at the option of Larson Electronic Glass. Products returned to Larson Electronic Glass for repair or replacement shall be received prepaid.

Expendable items, such as bellows, certain seal configurations, and products subjected to extreme environmental conditions or mechanical stress, may have a service life of less than twelve (12) months in normal usage. If such items fail to give reasonable service for a reasonable period of time, as determined solely by Larson Electronic Glass, they will be repaired or replaced at the option of Larson Electronic Glass.

Registered Trademark Ownership

Conflat ®	Varian Associates
Kovar ®	Carpenter Technology
Kwik•Flange ® *Large•Flange* ®	MDC Vacuum Products Corp.
PYREX ®	Corning Glass Works
Viton ®	E. I. du Pont de Nemours & Co.

LARSON ELECTRONIC GLASS

2840 Bay Rd. - P.O. Box 371
Redwood City, Ca 94064
Phone: 650-369-6734
Fax: 650-369-0728
E-mail: sales@larsonelectronicglass.com

Visit our web-site at: www.larsonelectronicglass.com

Materials and Flange Information

Material Descriptions

Materials commonly used to produce glass-to-metal seals.

Kovar - ASTM F15 Alloy

Kovar is a nickel - cobalt - iron alloy used for producing vacuum tight seals with borosilicate glasses. Corning type 7052 glass can be sealed directly to Kovar. Corning type 7740 (Pyrex) and quartz can be sealed to Kovar by using intermediate glasses. These are called "graded seals".

Stainless Steel - Type 304

Type 304 stainless steel is an 18% CR, 10% NI, low carbon, corrosion resistant alloy used to manufacture stainless steel to borosilicate glass seals. Type 304 is non-magnetic in an annealed condition and resists scaling up to 900 degrees C. Quartz can be sealed to stainless steel by using a graded seal.

Type 316 and 321 stainless steel to glass seals are available by special order.

Copper - OFHC

Oxygen free high conductivity is used to produce copper to glass seals. OFHC copper is used in applications where non-porosity and ductility are required. At room temperature in an annealed state OFHC copper has electrical conductivity of 100%.

Bellows - Type 321 Stainless Steel

The bellows offered in this catalog are "formed" bellows. They are used in glass systems to compensate for vibration, expansion, contraction and misalignment. Although the standard glass supplied with bellows is Pyrex, a variety of other borosilicate glass types can also be sealed directly to them. Quartz can be sealed to bellows using a graded seal.

The end opposite the glass can be supplied with: a thin wall cuff, a heavier tube end for welding or clamping, vacuum flanges, custom flanges, or other commercially available stainless steel fittings. Bellows are also available with glass on both ends.

Catalog Flange Designations

Listed under "Ref" in catalog.

No Flange

Ref	
T	Metal tubing

CF Conflat® Type Flanges

See pages 68-69 for information

Ref	O.D.	CF Model
F1	1.33"	1-1/3"
F2	2.73"	2-3/4"
F3	3.37"	3-3/8"
F4	4.47"	4-1/2"
F5	4.62"	4-5/8"
F6	5.97"	6"
F7	6.75"	6-3/4"
F8	7.97"	8"
F10	9.97"	10"

ISO *Kwik-Flange®*

See pages 70-71 for information

Ref		O.D.	ISO Model
K1	*K075*	1.18"	NW 16
K2	*K100*	1.57"	NW 25
K4	*K150*	2.16"	NW 40
K5	*K200*	2.95"	NW 50

ISO *Large-Flange®*

See pages 72-73 for information

Ref		O.D.	ISO Model
L6	*L250*	3.74"	NW 63
L8	*L300*	4.33"	NW 80
L10	*L400*	5.12"	NW 100
L16	*L600*	7.09"	NW 150
L20	*L800*	9.45"	NW 200

Glass specifications

Corning Type	Coefficient of Expansion 20°C to 300°C	Annealing Temp	Refractive Index @ 589.3 nm
7052	47.0 X 10^{-7}/°C	485° C	1.484
7056	51.5 X 10^{-7}/°C	510° C	1.487
7740 Pyrex	32.5 X 10^{-7}/°C	560° C	1.4727

Custom Designs and Modifications

Custom Designs and Modifications

The greatly expanded line of standard products complete with specifications and prices is detailed in this catalog. However, many other configurations and combinations of components are possible but not listed. Larson Electronic Glass specializes in supplying modified, custom, and special design products. Quotations can be made from your verbal description, a rough sketch, or complete engineering drawings. Please contact us for a discussion of your special requirements.

Larson Electronic Glass specializes in supplying custom designed and modified standard products. In addition to Viewports, Tubular Seals and Feedthrus a wide variety of other industrial and scientific devices are included. While the following directions apply primarily to Tubular Seals they also apply to other types of product. Contact the factory for a discussion of your special requirements.

1. Specify type of glass and metal to be sealed

Common glasses include:

- 7052 Glass
- 7740 PYREX
- Quartz
- Soft Glass

Metals include:

- Kovar
- Copper
- Type 304 Stainless Steel
- Special Alloys

Note that some glass and metal combinations require a graded seal transition. Type 304 Stainless Steel-to-Quartz Seals, for example, require a PYREX-to-Quartz transition section.

2. Specify Design

Please refer to **Custom Design Templates** of typical configurations on pages 8 and 9.

EXAMPLE:

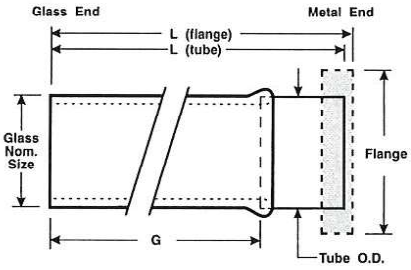

For a fast quotation, simply photocopy the drawing of interest, fill in the blanks, and FAX the information to us. In some cases, engineering drawings are desirable. However, a verbal description or a rough sketch is often all that is required.

3. Note Special Requirements

Use of seals in your application may involve other than ordinary operating conditions and require special materials and fabrication techniques. Include information on expected temperature and vacuum/pressure range, corrosive environments, etc.

4. Specify Glass/Metal Seal Connection to System

Standard choices include:

- Weldable Tube Seals
- CF Type Vacuum Flanges
- ISO *Kwik-Flange* & *Large-Flange* vacuum seals
- Custom flanges and other type seals

For additional information, refer to **Making Connections To Glass-To-Metal Seals** on pages 74 and 75.

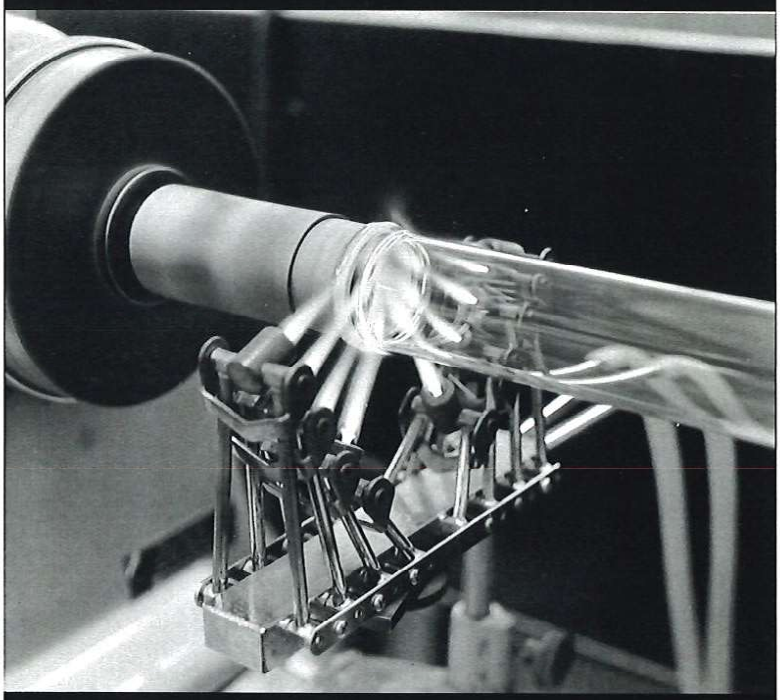

LARSON
ELECTRONIC GLASS

Custom Design Templates

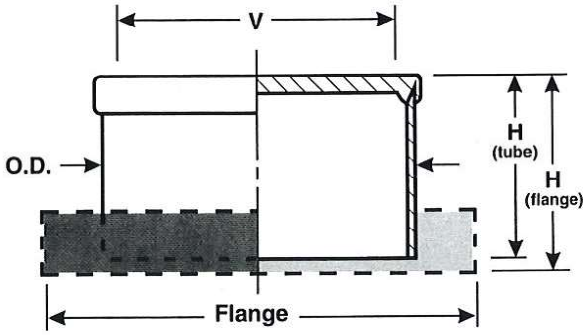

Viewports

Refer to pages 11-19
for standard product listings and standard
window materials and thicknesses
available for custom Viewports.

Flange	_____	H (tube)	_____
O.D.	_____	H (flange)	_____
V	_____		

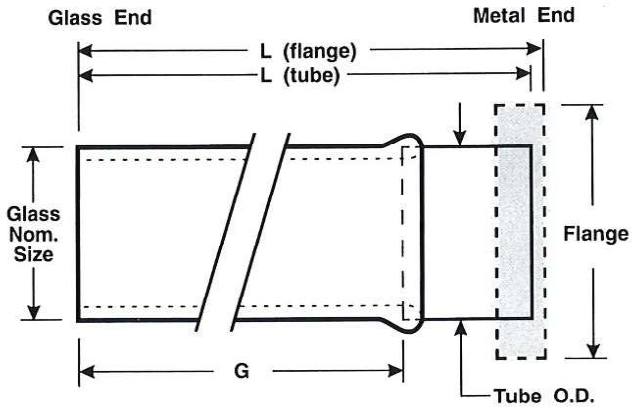

Tubular Seals/Adaptors - Open End

Refer to pages 22-39
for standard product listings

Flange	_____	L (tube)	_____
Tube O.D.	_____	L (flange)	_____
G	_____	Glass Nom.	_____

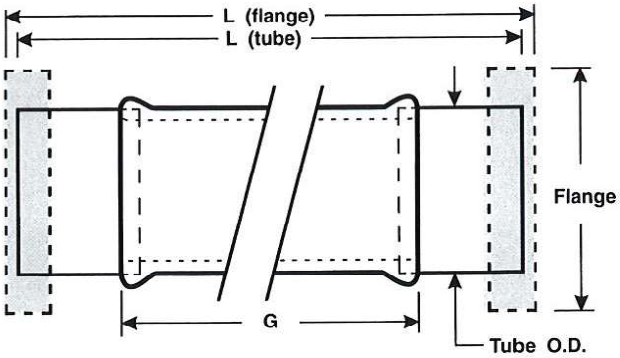

Double Ended Glass Adaptors

Refer to pages 42-47
for standard product listings

Flange	_____	L (tube)	_____
Tube O.D.	_____	L (flange)	_____
G	_____		

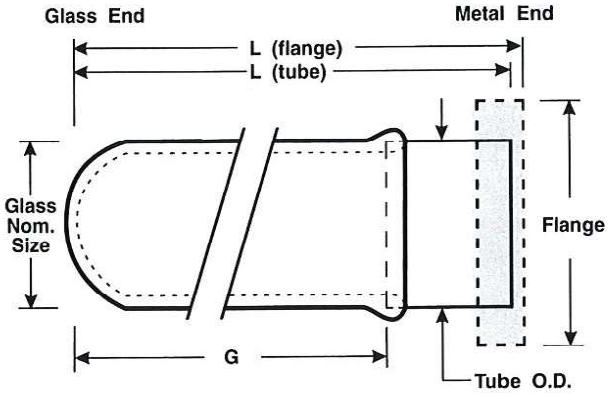

Closed End "Domed" Glass Adaptors

Refer to pages 48-53
for standard product listings

Flange	_____	L (tube)	_____
Tube O.D.	_____	L (flange)	_____
G	_____	Glass Nom.	_____

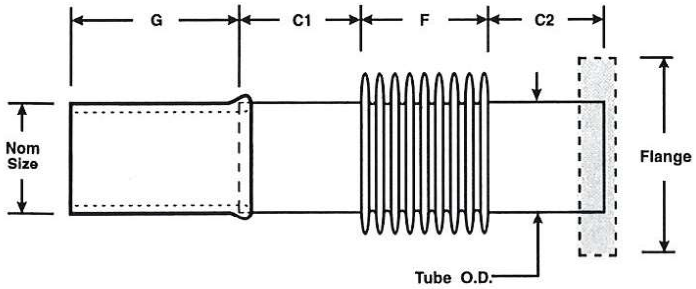

Bellows-to-Glass Adaptors

Refer to pages 54-61
for standard product listings

G _____ Flange _____
F _____ Nom. size _____
C1 _____ Tube O.D. _____
C2 _____

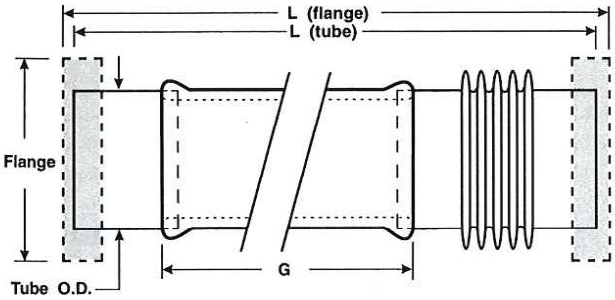

Double Ended Glass Adaptors with Bellows

Refer to pages 43-47
for standard product listings

Flange _____ L (tube) _____
Tube O.D. _____ L (flange) _____
G _____

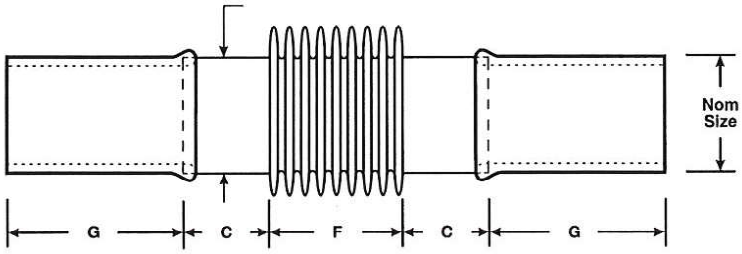

Bellows-to-Glass at Both Ends

Refer to pages 55-61
for standard product listings

Nom. size _____ C _____
G _____ F _____

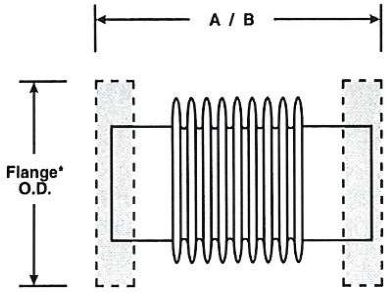

*C.F. Type (only) Rotatable at one end.

Stainless Steel Bellows/ Flexible Couplings

Refer to pages 62-63
for standard product listings

Flange O.D. _____ A/B _____

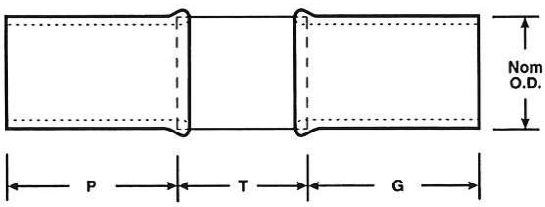

Glass-to-Glass, with or without Transition

Refer to pages 40-41
for standard product listings

Nom O.D._____ T _____
P _____ G _____

LARSON
ELECTRONIC GLASS

Viewports- General Information

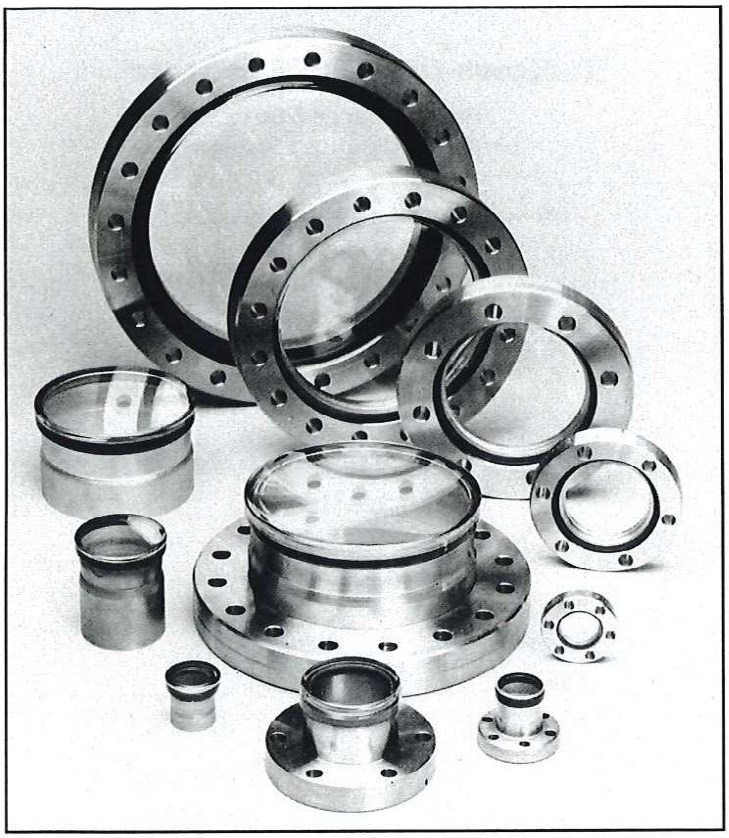

Viewport Optical Transmission Curves

Note that Transmission Curves are approximations and should be used for reference only.

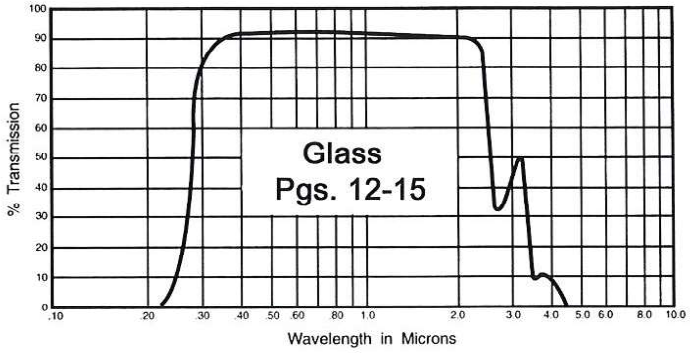

1 mm thick type 7056 glass - Reflection Losses Included

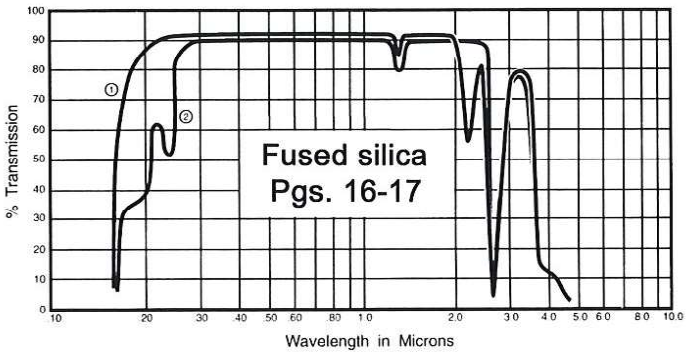

10 mm thick - Reflection Losses Included
(1) UV Grade (Fused Silica)
(2) Regular Grade (Fused Quartz)

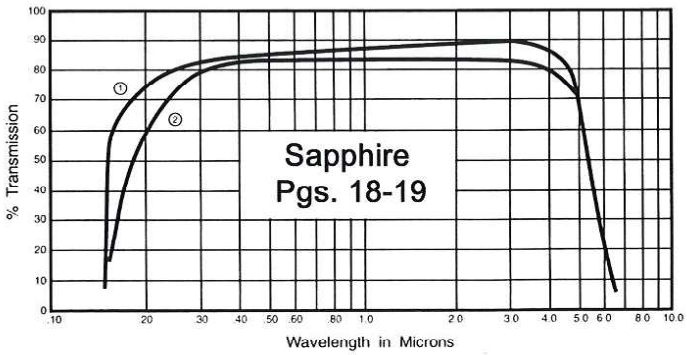

1 mm thick - Reflection Losses Included
(1) UV Grade
(2) Regular Grade

Viewports Sub-Directory

General

Larson Electronic Glass offers a selection of viewports with Glass, Fused silica, and Sapphire windows. The three have different optical and physical properties suitable for a variety of different applications. (Refer to the Optical Transmission Curves at right). Glass provides a large distortion-free viewing area at a moderate cost. Fused silica is suitable for applications requiring good ultraviolet radiation transmission. Fused silica also offers superior resistance to thermal shock. Sapphire has superior IR transmission characteristics and is bakeable to 450 C.

Viewports are supplied in both the low profile Zero-Length configuration and Standard Length with extension collar. Non-magnetic Standard Length Glass Viewports are also offered.

Most Viewport types are available in a choice of mountings including Tube, CF Type Flange, and ISO *Kwik-Flange* or *Large-Flange*.

All Viewports are supplied with window faces which have been finished to standards suitable for most applications. Custom Viewports are available on special request.

Viewport Options

Zero-Length Glass Repairs

Viewports - purchased from Larson Electronic Glass or other major vacuum component suppliers - can be repaired at our factory. FAX or Phone for details.

Anti-Reflective Coating

Glass Zero-Length viewports are available with anti-reflective coating. Please specify AR after the Model Number (*Example:* VP-150-F2-AR). Refer to price list for additional cost.

Lead Glass Shields

Features

- X-Ray Shield
- Lead equivalent 2mm (.078")
- Light transmission 85%
- Refractive Index 1.76
- Can be mounted with glass– removable or nonremovable
- Glass can be replaced
- Other flange sizes available by special order

Description

The Lead Glass Shield is mounted to the atmosphere side of a standard CF Type Zero-Length viewport using longer bolts. The vacuum seal is made by the Zero-Length viewport. See pages 12 and 14 for Zero-Length viewport information.

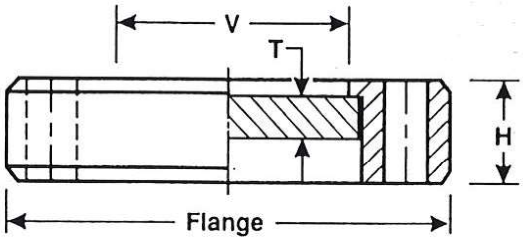

Lead Glass Shields

Model Number	Flange Size	View V	Thick T	Height H
LGS-150	2-3/4"	1.5"	1/4"	.50"
LGS-250	4-1/2"	2.5"	1/4"	.63"
LGS-400	6"	4.0"	1/4"	.69"
LGS-600	8"	6.0"	1/4"	.80"

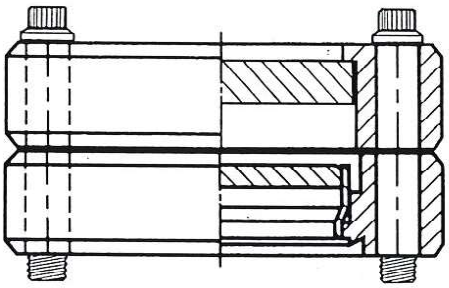

LARSON
ELECTRONIC GLASS

Glass Viewports

FEATURES

- Zero-Length offers greater distortion-free view area
- Zero-Length magnetic Kovar content only 1% to 3%
- Kovar offers superior mechanical strength
- Type 304 SS Viewports nom. nonmagnetic
- Lead-Glass Viewports available
- Choice of vacuum seal:
  - Metal Tube End — ISO *Kwik-Flange*
  - CF Type Flange — ISO *Large-Flange*
- CF Type Flange repeat bakeout cycles to 400°C
- CF Type Flange vacuum range to below 10^{-11} torr.
- ISO flange repeat bakeout cycles to 200°C[3]
- ISO flange vacuum range to 10^{-9} torr.

DESCRIPTION

Larson glass viewports are supplied with fully annealed, commercial grade, optical quality glass windows in ten standard sizes from 3/4 through 6". Moderate cost combined with good optical and physical properties make them the preferred choice for a wide variety of applications.

Notes: 1. Optical Transmission Curves are approximations and should be used for reference only.
2. Dimensions are in inches except where noted.
3. Repeat bakeout cycles will require periodic O-ring replacement.

Viewport Optical Transmission Curves[1]

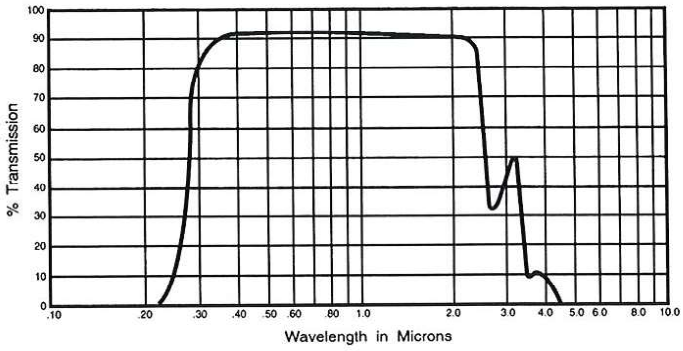

1 mm thick type 7056 glass - Reflection Losses Included

They are offered without flanges, with CF type flanges for use below 1 x 10^{-11} torr., and in ISO type O-ring seal flanges for use in intermediate vacuum ranges. Window surfaces offer a minimum of distortion and provide maximum light transmission suitable for most applications. Custom viewports are also available.

Zero-Length Glass Viewports

Window Nom Size	Mounting	Ref	Flange O.D.	ISO No	Model Number	Fig #	View V	Thick T	Height H
3/4"	• 3/4" O.D. Tube	T	-	-	-				
	• CF Type 1-1/3" Flange	F1	1.33	-	**VP-075-F1**	1	.62	.070	.285
	• *Kwik-Flange* K075	K1	1.18	NW16	**VP-075-K1**	2	.62	.070	.363
	• *Kwik-Flange* K100	K2	1.57	NW25	-				
	• *Kwik-Flange* K150	K4	2.16	NW40	-				
1"	• 1" O.D. Tube	T	-	-	-				
	• CF Type 2-3/4" Flange	F2	2.73	-	**VP-100-F2**	1	.90	.085	.500
	• *Kwik-Flange* K100	K2	1.57	NW25	**VP-100-K2**	2	.90	.085	.510
	• *Kwik-Flange* K150	K4	2.16	NW40	**VP-100-K4**	2	.90	.085	.450
	• *Kwik-Flange* K200	K5	2.95	NW50	-				
1-1/2"	• 1-1/2" O.D. Tube	T	-	-	-				
	• CF Type 2-3/4" Flange	F2	2.73	-	**VP-150-F2**	1	1.40	.105	.500
	• CF Type 3-3/8" Flange	F3	3.37	-	-				
	• *Kwik-Flange* K150	K4	2.16	NW40	-				
	• *Kwik-Flange* K200	K5	2.95	NW50	**VP-150-K5**	2	1.40	.105	.500
	• *Large-Flange* L250	L6	3.74	NW63	**VP-150-L6**	3	1.40	.105	.730
	• *Large-Flange* L300	L8	4.33	NW80	**VP-150-L8**	3	1.40	.105	.730
2"	• 2" O.D. Tube	T	-	-	-				
	• CF Type 3-3/8" Flange	F3	3.37	-	**VP-200-F3**	1	1.90	.125	.625
	• *Kwik-Flange* K200	K5	2.95	NW50	-				
	• *Large-Flange* L250	L6	3.74	NW63	**VP-200-L6**	3	1.90	.125	.730
	• *Large-Flange* L300	L8	4.33	NW80	**VP-200-L8**	3	1.90	.125	.730

See Custom Design information on Pages 6-9.

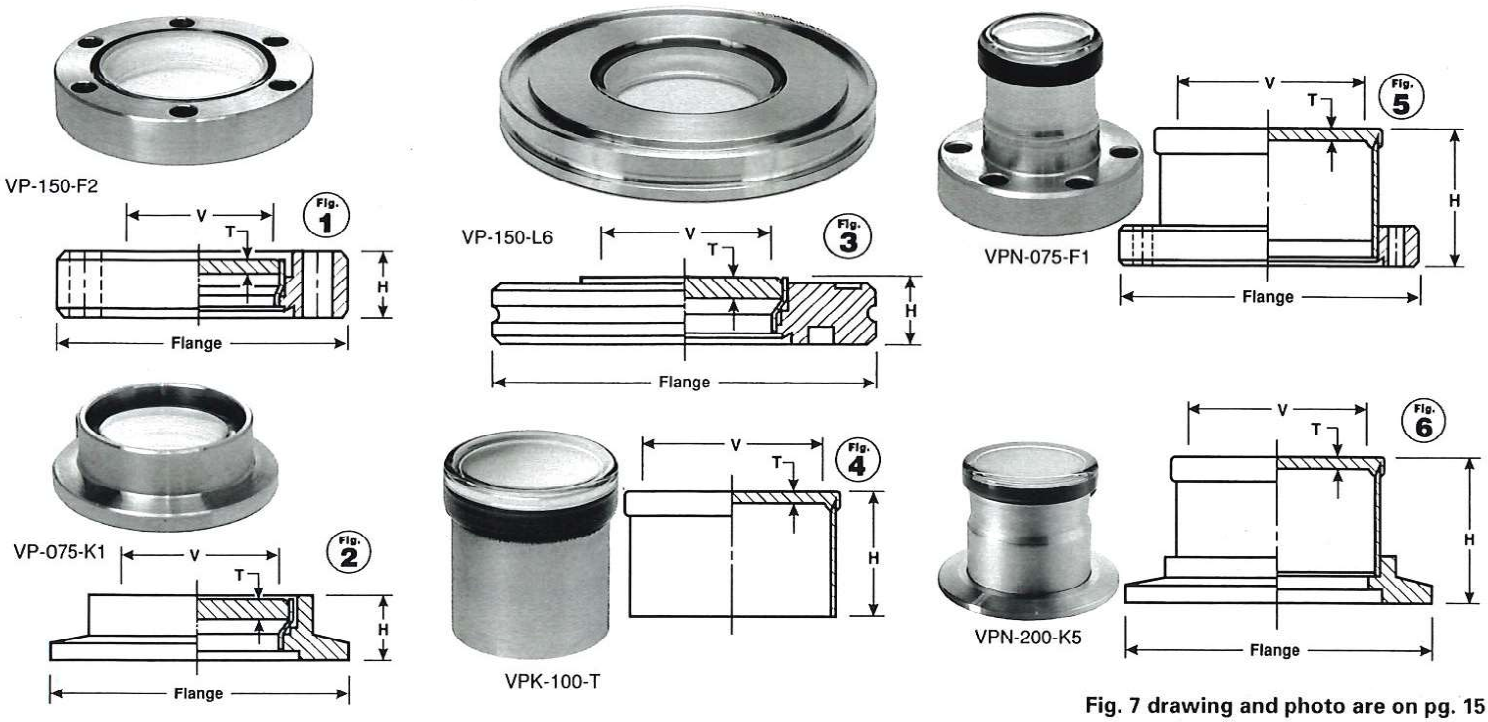

Fig. 7 drawing and photo are on pg. 15

Kovar Standard Length Glass Viewports

Model Number	Fig. #	View V	Thick T	Height H
VPK-075-T	4	.50	.070	1-1/8
VPK-075-F1	5	.50	.070	1-1/4
VPK-075-K1	6	.50	.070	1-1/4
VPK-075-K2	6	.50	.070	1-1/4
VPK-075-K4	6	.50	.070	1-1/4
VPK-100-T	4	.75	.105	1-1/4
VPK-100-F2	5	.75	.105	1-3/8
VPK-100-K2	6	.75	.105	1-3/8
VPK-100-K4	6	.75	.105	1-3/8
VPK-100-K5	6	.75	.105	1-3/8
VPK-150-T	4	1.25	.125	1-1/4
VPK-150-F2	5	1.25	.125	1-3/8
VPK-150-F3	5	1.25	.125	1-3/8
VPK-150-K4	6	1.25	.125	1-3/8
VPK-150-K5	6	1.25	.125	1-3/8
-				
-				
VPK-200-T	4	1.62	.170	1-3/4
VPK-200-F3	5	1.62	.170	1-7/8
VPK-200-K5	6	1.62	.170	1-7/8
VPK-200-L6	7	1.62	.170	1-7/8
-				

304 Stainless Steel - Nonmagnetic Glass Viewports

Model Number	Fig. #	View V	Thick T	Height H
VPN-075-T	4	.50	.070	1-1/8
VPN-075-F1	5	.50	.070	1-1/4
VPN-075-K1	6	.50	.070	1-1/4
VPN-075-K2	6	.50	.070	1-1/4
VPN-075-K4	6	.50	.070	1-1/4
VPN-100-T	4	.75	.105	1-1/4
VPN-100-F2	5	.75	.105	1-3/8
VPN-100-K2	6	.75	.105	1-3/8
VPN-100-K4	6	.75	.105	1-3/8
VPN-100-K5	6	.75	.105	1-3/8
VPN-150-T	4	1.25	.125	1-7/8
VPN-150-F2	5	1.25	.125	2
VPN-150-F3	5	1.25	.125	2
VPN-150-K4	6	1.25	.125	2
VPN-150-K5	6	1.25	.125	2
-				
-				
VPN-200-T	4	1.62	.170	2
VPN-200-F3	5	1.62	.170	2-1/8
VPN-200-K5	6	1.62	.170	2-1/8
VPN-200-L6	7	1.62	.170	2-1/8
-				

Continued from previous page

LARSON
ELECTRONIC GLASS

Glass Viewports

Viewport Optical Transmission Curves[1]

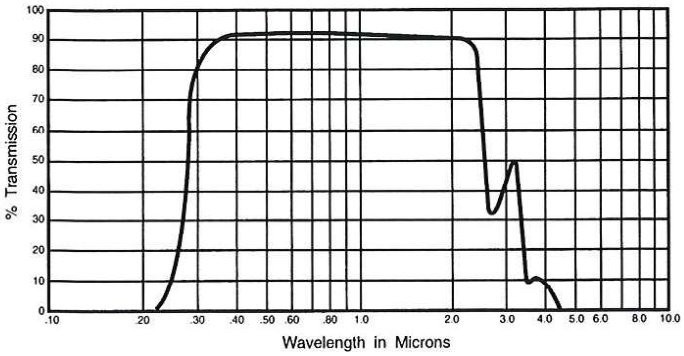

1 mm thick - Reflection Losses Included

VP-600-F8

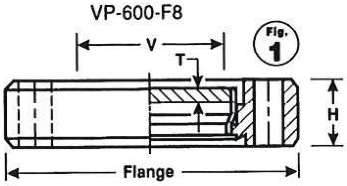

VP-300-L10

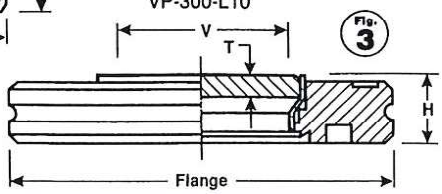

Notes: 1. Optical Transmission Curves are approximations and should be used for reference only.
2. Dimensions are in inches except where noted.

Zero- Length Glass Viewports

Window Nom Size	Mounting	Ref	Flange O.D.	ISO No	Model Number	Fig #	View V	Thick T	Height H
2-1/2"	• 2-1/2" O.D. Tube	T	-	-	-				
	• CF Type 4-1/2" Flange	F4	4.47	-	**VP-250-F4**	1	2.69	.170	.680
	• CF Type 4-5/8" Flange	F5	4.62	-	**VP-250-F5**	1	2.69	.170	.750
	• *Large-Flange* L250	L6	3.74	NW63	-				
	• *Large-Flange* L300	L8	4.33	NW80	-				
3"	• 3" O.D. Tube	T	-	-	-				
	• CF Type 4-5/8" Flange	F5	4.62	-	**VP-300-F5**	1	2.69	.170	.750
	• CF Type 6" Flange	F6	5.97	-	**VP-300-F6**	1	2.69	.170	.780
	• *Large-Flange* L300	L8	4.33	NW80	-				
	• *Large-Flange* L400	L10	5.12	NW100	**VP-300-L10**	3	2.69	.170	.730
3-1/2"	• 3-1/2" O.D. Tube	T	-	-					
	• CF Type 6" Flange	F6	5.97	-					
	• *Large-Flange* L400	L10	5.12	NW100					
4"	• 4" O.D. Tube	T	-	-	-				
	• CF Type 6" Flange	F6	5.97	-	**VP-400-F6**	1	3.88	.200	.780
	• CF Type 6-3/4" Flange	F7	6.75	-	**VP-400-F7**	1	3.88	.200	.840
	• *Large-Flange* L400	L10	5.12	NW100	-				
	• *Large-Flange* L600	L16	7.09	NW160	**VP-400-L16**	3	3.88	.200	.850
5"	• 5" O.D. Tube	T	-	-	-				
	• CF Type 6-3/4" Flange	F7	6.75	-	**VP-500-F7**	1	3.88*	.375	.840
	• *Large-Flange* L600	L16	7.09	NW160	-				
6"	• 6" O.D. Tube	T	-	-	-				
	• CF Type 8" Flange	F8	7.97	-	**VP-600-F8**	1	5.38	.375	.880
	• CF Type 10" Flange	F10	9.97	-	**VP-600-F10**	1	5.38	.375	.880
	• *Large-Flange* L600	L16	7.09	NW160	-				
	• *Large-Flange* L800	L20	9.45	NW200	**VP-600-L20**	3	5.38	.375	.850

**Note that 5" size Zero-Length Glass Viewports are supplied with 4" windows.*

See Custom Design information on Pages 6-9.

VPN-400-T

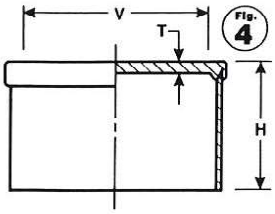

VPN-400-F6

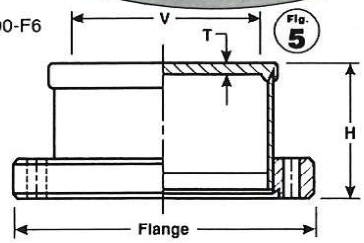

VPN-250-L8

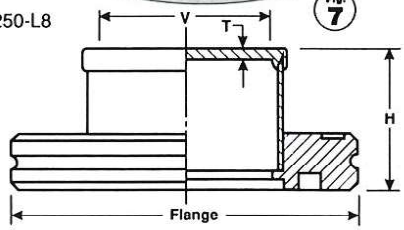

Kovar Standard Length Glass Viewports

Model Number	Fig #	View V	Thick T	Height H
VPK-250-T	4	2.00	.170	1-3/4
VPK-250-F4	5	2.00	.170	1-7/8
VPK-250-F5	5	2.00	.170	1-7/8
VPK-250-L6	7	2.00	.170	1-7/8
VPK-250-L8	7	2.00	.170	1-7/8
VPK-300-T	4	2.50	.200	1-3/4
VPK-300-F5	5	2.50	.200	1-7/8
VPK-300-F6	5	2.50	.200	1-7/8
VPK-300-L8	7	2.50	.200	1-7/8
VPK-300-L10	7	2.50	.200	1-7/8
VPK-400-T	4	3.50	.200	2
VPK-400-F6	5	3.50	.200	2-1/8
VPK-400-F7	5	3.50	.200	2-1/8
VPK-400-L10	7	3.50	.200	2-1/8
VPK-400-L16	7	3.50	.200	2-1/8
VPK-500-T	4	4.38	.375	2-7/8
VPK-500-F7	5	4.38	.375	3
VPK-500-L16	7	4.38	.375	3
VPK-600-T	4	5.38	.375	2-7/8
VPK-600-F8	5	5.38	.375	3
VPK-600-F10	5	5.38	.375	3
VPK-600-L16	7	5.38	.375	3
VPK-600-L20	7	5.38	.375	3

304 Stainless Steel - Nonmagnetic Glass Viewports

Model Number	Fig #	View V	Thick T	Height H
VPN-250-T	4	2.00	.170	2
VPN-250-F4	5	2.00	.170	2-1/8
VPN-250-F5	5	2.00	.170	2-1/8
VPN-250-L6	7	2.00	.170	2-1/8
VPN-250-L8	7	2.00	.170	2-1/8
VPN-300-T	4	2.50	.200	2
VPN-300-F5	5	2.50	.200	2-1/8
VPN-300-F6	5	2.50	.200	2-1/8
VPN-300-L8	7	2.50	.200	2-1/8
VPN-300-L10	7	2.50	.200	2-1/8
VPN-350-T	4	3.00	.200	2
VPN-350-F6	5	3.00	.200	2-1/8
VPN-350-L10	7	3.00	.200	2-1/8
VPN-400-T	4	3.50	.200	2
VPN-400-F6	5	3.50	.200	2-1/8
VPN-400-F7	5	3.50	.200	2-1/8
VPN-400-L10	7	3.50	.200	2-1/8
VPN-400-L16	7	3.50	.200	2-1/8
VPN-500-T	4	4.38	.375	2-5/8
VPN-500-F7	5	4.38	.375	2-3/4
VPN-500-L16	7	4.38	.375	2-3/4
VPN-600-T	4	5.38	.375	2-5/8
VPN-600-F8	5	5.38	.375	2-3/4
VPN-600-F10	5	5.38	.375	2-3/4
VPN-600-L16	7	5.38	.375	2-3/4
VPN-600-L20	7	5.38	.375	2-3/4

Continued from previous page

LARSON
ELECTRONIC GLASS

Fused Silica Viewports

FEATURES

- High purity fused silica
  UV grade
- Low-loss ultraviolet transmission
- Resistant to thermal shock
- Choice of vacuum seal:
  - Tubular Sleeve
  - CF Type Flange
  - ISO *Kwik-Flange*
  - ISO *Large-Flange*
  - Other flange sizes available by special order
- CF Type Flange repeat bakeout cycles to 200°C(3)
- CF Type Flange vacuum range to below 10^{-11} torr.
- ISO flange intermittent bakeout cycles to 200°C(4)
- ISO flange vacuum range to 10^{-9} torr.

Viewport Optical Transmission Curves(1)

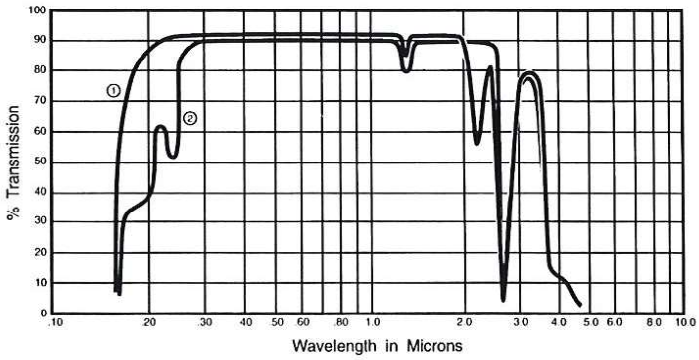

10 mm thick - Reflection Losses Included
(1) UV Grade (Fused Silica)
(2) Regular Grade (Fused Quartz)

Notes:
1. Optical Transmission Curves are approximations and should be used for reference only.
2. Dimensions are in inches except where noted.
3. Window-to-sleeve transitions are made of lead alloy which melts at 300°C.
4. Repeat bakeout cycles will require periodic replacement of O-rings.

Zero-Length Fused Silica Viewports

Window Nom Size	Mounting	Ref	Flange O.D.	ISO No	Model Number	Fig #	View V	Thick T	Height H
1-1/2"	• 1-1/2" O.D. Tube	T	-	-	-				
	• CF Type 2-3/4" Flange	F2	2.73	-	**VQZ-150-F2**	1	1.40	.125	.50
	• CF Type 3-3/8" Flange	F3	3.37	-	**VQZ-150-F3**	1	1.40	.125	.62
	• *Kwik-Flange* K150	K4	2.16	NW40	-				
	• *Kwik-Flange* K200	K5	2.95	NW50	**VQZ-150-K5**	2	1.40	.125	.62
2-1/2"	• 2-1/2" O.D. Tube	T	-	-	-				
	• CF Type 4-1/2" Flange	F4	4.47	-	**VQZ-250-F4**	1	2.69	.250	.68
	• CF Type 4-5/8" Flange	F5	4.62	-	**VQZ-250-F5**	1	2.69	.250	.75
	• *Large-Flange* L250	L6	3.74	NW63	-				
4"	• 4" O.D. Tube	T	-	-	-				
	• CF Type 6" Flange	F6	5.97	-	**VQZ-400-F6**	1	3.88	.250	.78
	• CF Type 6-3/4" Flange	F7	6.75	-	**VQZ-400-F7**	1	3.88	.250	.84
	• *Large-Flange* L400	L10	5.12	NW100	-				
6"	• 6" O.D. Tube	T	-	-	-				
	• CF Type 8" Flange	F8	7.97	-	**VQZ-600-F8**	1	5.38	.375	.88
	• *Large-Flange* L600	L16	7.09	NW160	-				
8"	• 8" O.D. Tube	T	-	-	-				
	• CF Type 10" Flange	F10	9.97	-	**VQZ-800-F10**	1	7.78	.375	.97
	• *Large-Flange* L800	L20	9.45	NW200	-				

See Custom Design information on Pages 6-9.

DESCRIPTION

Larson fused silica viewports are preferred over glass viewports because of their transparency to ultraviolet radiation, higher abrasion resistance, and low coefficient of thermal expansion which makes them very resistant to thermal shock.

Fused silica viewports are offered without flanges, with CF type flanges for ultra-high vacuum, and in ISO type O-ring sealed flanges for use in intermediate vacuum ranges. Viewport window surfaces offer a minimum of distortion and provide maximum transmission for most applications.

VQZ-400-F6

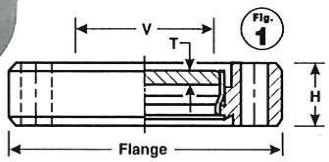

VQZ-150-K5

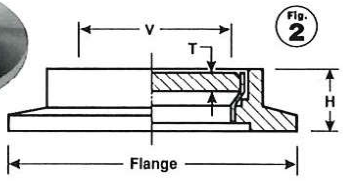

VQ-150-T

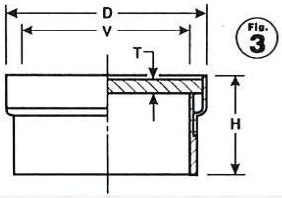

VQ-150-F2

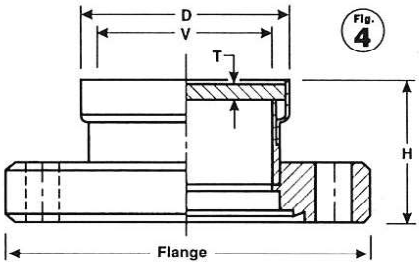

VQ-150-K4

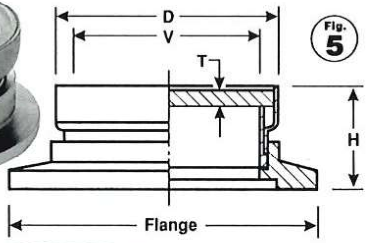

VQ-400-L10

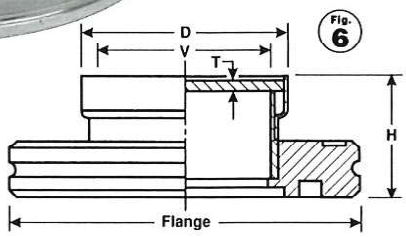

Standard Length Fused Silica Viewports

Model Number	Fig #	View V	Thick T	Height H	Diam D
VQ-150-T	3	1.37	.125	.85	1.76
VQ-150-F2	4	1.37	.125	1.06	1.76
VQ-150-F3	4	1.37	.125	1.06	1.76
VQ-150-K4	5	1.37	.125	1.00	1.76
VQ-150-K5	5	1.37	.125	1.00	1.76
VQ-250-T	3	2.37	.250	1.10	2.88
VQ-250-F4	4	2.37	.250	1.48	2.88
VQ-250-F5	4	2.37	.250	1.48	2.88
VQ-250-L6	6	2.37	.250	1.35	2.88
VQ-400-T	3	3.84	.250	1.35	4.41
VQ-400-F6	4	3.84	.250	1.79	4.41
VQ-400-F7	4	3.84	.250	1.79	4.41
VQ-400-L10	6	3.84	.250	1.60	4.41
VQ-600-T	3	5.78	.375	1.71	6.37
VQ-600-F8	4	5.78	.375	2.21	6.37
VQ-600-L16	6	5.78	.375	2.10	6.37
VQ-800-T	3	7.78	.375	1.75	8.37
VQ-800-F10	4	7.78	.375	2.25	8.37
VQ-800-L20	6	7.78	.375	2.13	8.37

Continued from previous page

LARSON
ELECTRONIC GLASS

Sapphire Viewports

FEATURES

- High purity sapphire[4]
- Low expansion alloys
- Choice of mounting:
  - SS Tube and Weld Adaptor
  - CF Type Flange
  - ISO *Kwik-Flange*
- CF Type Flange repeat bakeout cycles to 450°C
- CF Type Flange vacuum range to below 10^{-11} torr.
- ISO flange intermittent bakeout cycles to 200°C[3]
- ISO flange vacuum range to 10^{-9} torr.

DESCRIPTION

Sapphire viewports are preferred for their superior optical transmission properties. Windows are silver-brazed to Kovar sleeves. They are offered mounted in stainless steel tube-weld adaptors, and CF type flanges for use below 1 x 10^{-11} torr. They are also offered in ISO type O-ring seal flanges for use in intermediate vacuum ranges.

Window surfaces offer a minimum of distortion and provide maximum light transmission suitable for most applications. UV grade viewports have a 90° crystal orientation which is normal to the optical axis. Custom viewports are available for applications requiring special materials and optical properties.

Notes:
1. Optical Transmission Curves are approximations and should be used for reference only.
2. Dimensions are in inches except where noted.
3. Repeat bakeout cycles will require periodic replacement of O-rings.
4. 5/8, 3/4, and 1 inch sizes are UV grade.

Viewport Optical Transmission Curves[1]

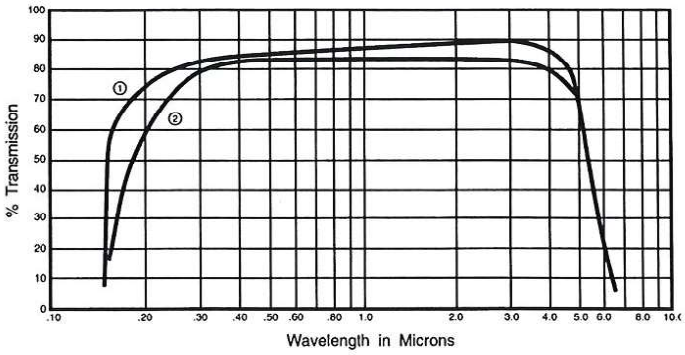

1 mm thick - Reflection Losses Included
(1) UV Grade
(2) Regular Grade

Window Nom Size	Mounting	Ref	Flange O.D.	ISO No	Zero-Length Sapphire Viewports: Model Number	Fig #	View V	Thick T	Height H	Weld OD W
5/8"	• .660" O.D. Kovar Tube	T	-	-						
	• CF Type 1-1/3" Flange	F1	1.33	-						
	• *Kwik-Flange* K075	K1	1.18	NW16						
3/4"	• SS Weld Adapator	T	-	-	VSZ-075-T	1	.693	.080	.438	1.50
	• CF Type 2-3/4" Flange	F2	2.73	-	VSZ-075-F2	2	.693	.080	.500	-
	• *Kwik-Flange* K150	K4	2.16	NW40	VSZ-075-K4	3	.693	.080	.560	-
1"	• SS Weld Adapator	T	-	-	VSZ-100-T	1	.943	.080	.438	1.50
	• CF Type 2-3/4" Flange	F2	2.73	-	VSZ-100-F2	2	.943	.080	.500	-
	• *Kwik-Flange* K150	K4	2.16	NW40	VSZ-100-K4	3	.943	.080	.560	-
1-1/2"	• SS Weld Adapator	T	-	-	VSZ-150-T	1	1.443	.080	.485	2.50
	• CF Type 4-1/2" Flange	F4	4.47	-	VSZ-150-F4	2	1.443	.080	.680	-
2"	• SS Weld Adapator	T	-	-	VSZ-200-T	1	1.943	.094	.540	2.50
	• CF Type 4-1/2" Flange	F4	4.47	-	VSZ-200-F4	2	1.943	.094	.680	-

See Custom Design information on Pages 6-9.

VSZ-100-T

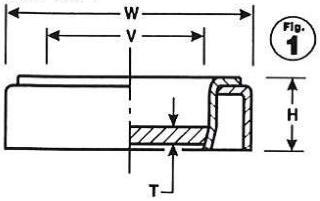

VSZ-100-F2

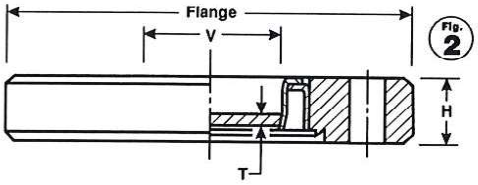

VSZ-100-K4

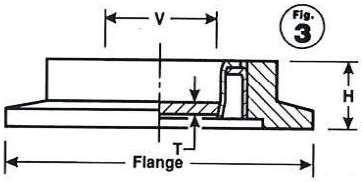

VS-062-T

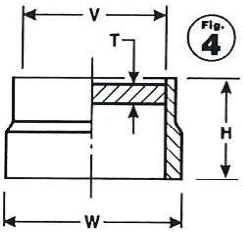

VS-062-F1

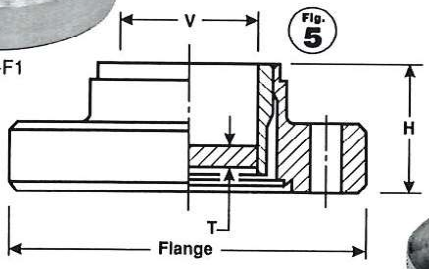

VS-062-K1

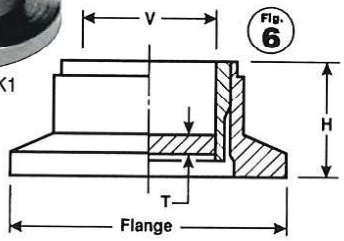

Standard Length Sapphire Viewports

Model Number	Fig. #	View V	Thick T	Height H	Weld OD W
VS-062-T	4	.590	.062	.425	.660
VS-062-F1	5	.590	.062	.500	-
VS-062-K1	6	.590	.062	.500	-

Continued from previous page

Overview and Sub-Directory

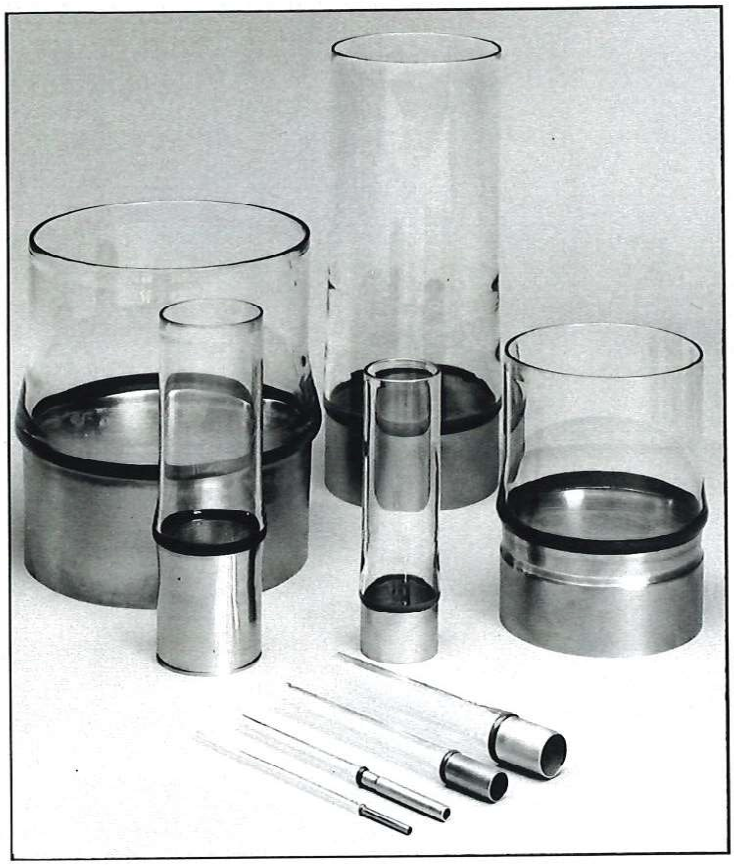

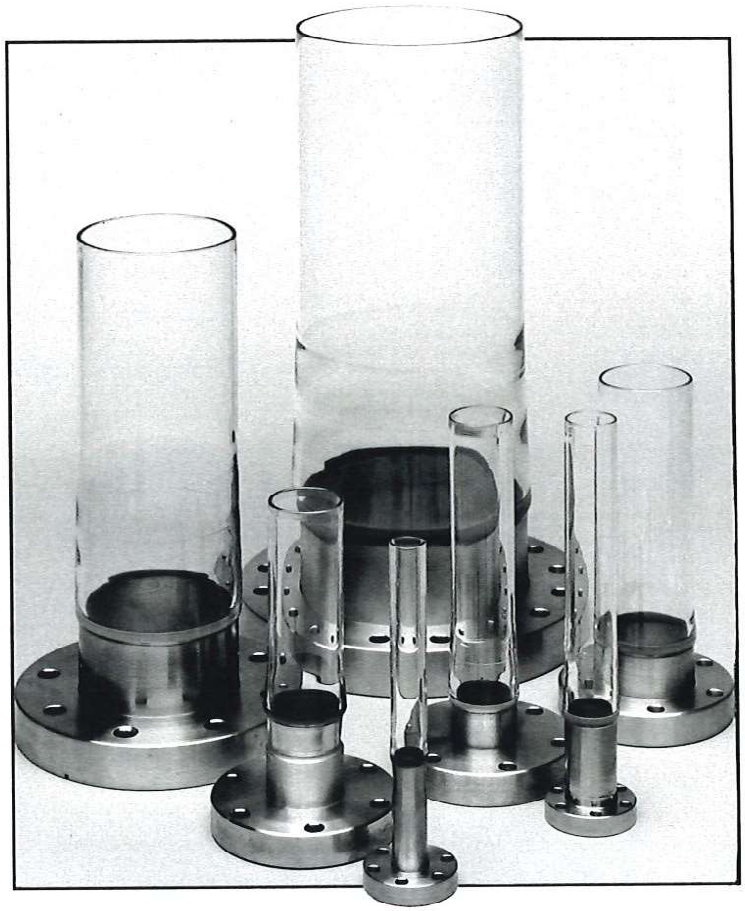

Tubular Seals, Open-End

Tubular Seals with Flange Adaptors, Open-End

Custom Designs and Special Modifications

Note that virtually all standard catalog items are available in modified form to meet your special requirements. See Custom Designs and Modifications on pages 6-7 and Custom Design Templates on pages 8-9.

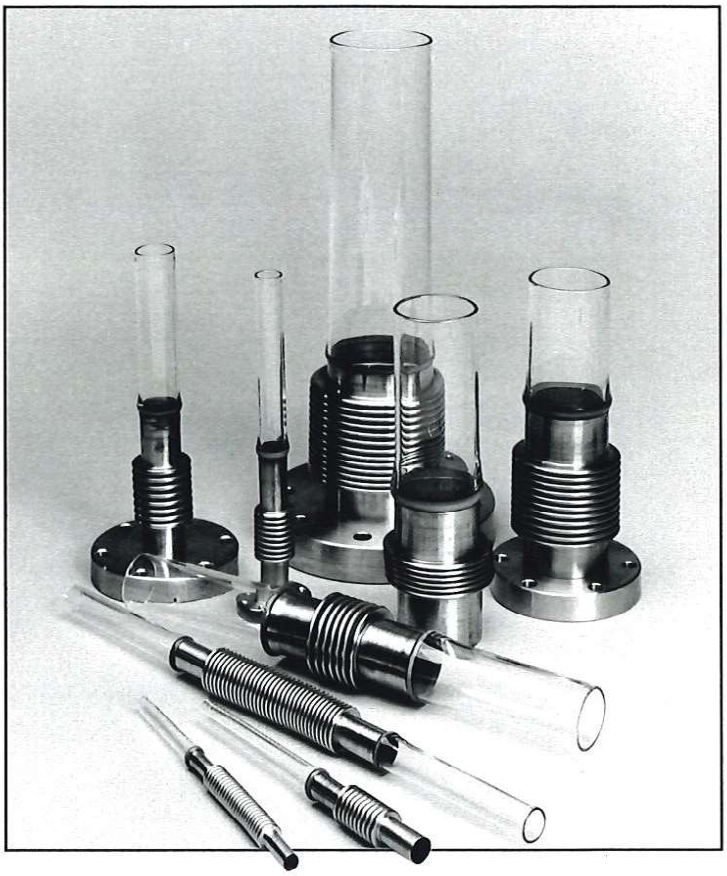

Double Ended Glass Adaptors

- **Tube Seals • CF Type Flanges**
- ***Kwik-Flange • Large-Flange***

Closed End "Domed" Glass Adaptors

- **Tube Seals • CF Type Flanges**
- ***Kwik-Flange • Large-Flange***

Stainless Steel Bellows-to-Glass Adaptors

- **Tube Seals • CF Type Flanges**
- ***Kwik-Flange • Large-Flange***

Stainless Steel Bellows & Flexible Couplings

- **Tube Seals • CF Type Flanges**
- ***Kwik-Flange • Large-Flange***

LARSON
ELECTRONIC GLASS

Tubular Seals / Adaptors - Kovar & Copper

FEATURES

- 21 Sizes from 1/8 thru 6 inch
- Choice of Kovar-to-
  - 7740 PYREX Graded Seal
  - 7052 Glass
  - Special Glass
- Copper-to-7740 PYREX (Tube only)
- Choice of Kovar metal-end vacuum seal:
  Tube End — ISO *Large-Flange*
  CF Type Flange — Custom Flange
  ISO *Kwik-Flange*
- CF Type Flange repeat bakeout cycles to 400°C
- CF Type Flange vacuum range to below 10^{-11} torr.
- ISO flange intermittent bakeout cycles to 200°C[3]
- ISO flange vacuum range to 10^{-9} torr.

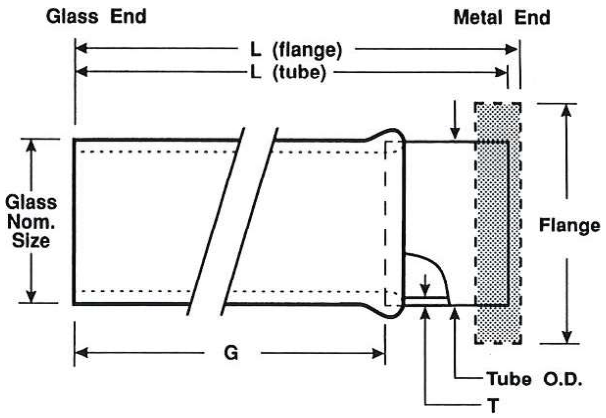

Notes: 1. Dimensions are in inches except where noted.
2. Overall lengths (L) and Glass lengths (G) are nominal ± 1/8 inch.
3. Repeat bakeout cycles will require periodic replacement of O-rings.

Glass-End Nom Size	Metal-End	Ref	Flange OD	ISO No.	Kovar-to-7740 PYREX Model Number	Lgth L	Glass G	Metal T
1/8"	• 1/8" O.D.Tube	T	-	-	KP-012-T	5-1/4	4-1/8	.010
	• CF Type 1-1/3" Flange	F1	1.33	-	KP-012-F1	5-3/8	4-1/8	-
	• *Kwik-Flange* K075	K1	1.18	NW16	KP-012-K1	5-3/8	4-1/8	-
3/16"	• 3/16" O.D.Tube	T	-	-	KP-018-T	5-1/4	4-1/8	.010
	• CF Type 1-1/3" Flange	F1	1.33	-	KP-018-F1	5-3/8	4-1/8	-
	• *Kwik-Flange* K075	K1	1.18	NW16	KP-018-K1	5-3/8	4-1/8	-
1/4"	• 1/4" O.D.Tube	T	-	-	KP-025-T	5-1/4	4-1/8	.020
	• CF Type 1-1/3" Flange	F1	1.33	-	KP-025-F1	5-3/8	4-1/8	-
	• *Kwik-Flange* K075	K1	1.18	NW16	KP-025-K1	5-3/8	4-1/8	-
5/16"	• 5/16" O.D.Tube	T	-	-	KP-031-T	5-1/4	4-1/8	.030
	• CF Type 1-1/3" Flange	F1	1.33	-	KP-031-F1	5-3/8	4-1/8	-
	• *Kwik-Flange* K075	K1	1.18	NW16	KP-031-K1	5-3/8	4-1/8	-
3/8"	• 3/8" O.D.Tube	T	-	-	KP-037-T	5-1/4	4-1/8	.030
	• CF Type 1-1/3" Flange	F1	1.33	-	KP-037-F1	5-3/8	4-1/8	-
	• *Kwik-Flange* K075	K1	1.18	NW16	KP-037-K1	5-3/8	4-1/8	-
1/2"	• 1/2" O.D.Tube	T	-	-	KP-050-T	5-1/4	4-1/8	.030
	• CF Type 1-1/3" Flange	F1	1.33	-	KP-050-F1	5-3/8	4-1/8	-
	• *Kwik-Flange* K075	K1	1.18	NW16	KP-050-K1	5-3/8	4-1/8	-
	• *Kwik-Flange* K100	K2	1.57	NW25	KP-050-K2	5-3/8	4-1/8	-

See Custom Design information on Pages 6-9.

Kovar-to-7052 Glass				Copper-to-7740 PYREX			
Model Number	**Lgth L**	**Glass G**	**Metal T**	**Model Number**	**Lgth L**	**Glass G**	**Metal T**
KG-012-T	5-1/4	4-1/8	.010	-			
KG-012-F1	5-3/8	4-1/8	-	-			
KG-012-K1	5-3/8	4-1/8	-	-			
KG-018-T	5-1/4	4-1/8	.010	**CP-018-T**	6	3	.020
KG-018-F1	5-3/8	4-1/8	-	-			
KG-018-K1	5-3/8	4-1/8	-	-			
KG-025-T	5-1/4	4-1/8	.020	**CP-025-T**	6	3	.020
KG-025-F1	5-3/8	4-1/8	-	-			
KG-025-K1	5-3/8	4-1/8	-	-			
KG-031-T	5-1/4	4-1/8	.030	**CP-031-T**	6	3	.020
KG-031-F1	5-3/8	4-1/8	-	-			
KG-031-K1	5-3/8	4-1/8	-	-			
KG-037-T	5-1/4	4-1/8	.030	**CP-037-T**	6	3	.035
KG-037-F1	5-3/8	4-1/8	-	-			
KG-037-K1	5-3/8	4-1/8	-	-			
KG-050-T	5-1/4	4-1/8	.030	**CP-050-T**	6	3	.035
KG-050-F1	5-3/8	4-1/8	-	-			
KG-050-K1	5-3/8	4-1/8	-	-			
KG-050-K2	5-3/8	4-1/8	-	-			

Continued from previous page

LARSON
ELECTRONIC GLASS

Tubular Seals / Adaptors - Kovar & Copper

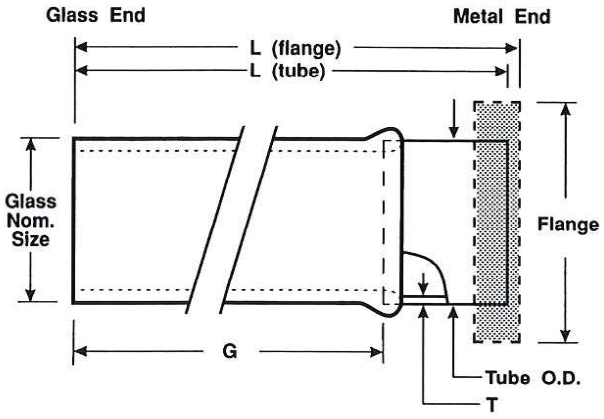

Notes: 1. Dimensions are in inches except where noted.
2. Overall lengths (L) and Glass lengths (G) are nominal ± 1/8 inch.

Glass-End Nom Size	Metal-End	Ref	Flange OD	ISO No.	Kovar-to-7740 PYREX Model Number	Lgth L	Glass G	Metal T
5/8"	• 5/8" O.D.Tube	T	-	-	**KP-062-T**	5-1/4	4-1/8	.030
	• CF Type 1-1/3" Flange	F1	1.33	-	**KP-062-F1**	5-3/8	4-1/8	-
	• *Kwik-Flange* K075	K1	1.18	NW16	**KP-062-K1**	5-3/8	4-1/8	-
	• *Kwik-Flange* K100	K2	1.57	NW25	**KP-062-K2**	5-3/8	4-1/8	-
3/4"	• 3/4" O.D.Tube	T	-	-	**KP-075-T**	5-1/4	4-1/8	.030
	• CF Type 1-1/3" Flange	F1	1.33	-	**KP-075-F1**	5-3/8	4-1/8	-
	• *Kwik-Flange* K075	K1	1.18	NW16	**KP-075-K1**	5-3/8	4-1/8	-
	• *Kwik-Flange* K100	K2	1.57	NW25	**KP-075-K2**	5-3/8	4-1/8	-
	• *Kwik-Flange* K150	K4	2.16	NW40	**KP-075-K4**	5-3/8	4-1/8	-
7/8"	• 7/8" O.D.Tube	T	-	-	**KP-087-T**	5-1/4	4-1/8	.030
	• CF Type 2-3/4" Flange	F2	2.73	-	**KP-087-F2**	5-3/8	4-1/8	-
	• *Kwik-Flange* K100	K2	1.57	NW25	**KP-087-K2**	5-3/8	4-1/8	-
	• *Kwik-Flange* K150	K4	2.16	NW40	**KP-087-K4**	5-3/8	4-1/8	-
1"	• 1" O.D.Tube	T	-	-	**KP-100-T**	5-1/4	4-1/8	.030
	• CF Type 2-3/4 "Flange	F2	2.73	-	**KP-100-F2**	5-3/8	4-1/8	-
	• *Kwik-Flange* K100	K2	1.57	NW25	**KP-100-K2**	5-3/8	4-1/8	-
	• *Kwik-Flange* K150	K4	2.16	NW40	**KP-100-K4**	5-3/8	4-1/8	-
	• *Kwik-Flange* K200	K5	2.95	NW50	**KP-100-K5**	5-3/8	4-1/8	-
1-1/8"	• 1-1/8" O.D.Tube	T	-	-	**KP-112-T**	5-1/4	4-1/8	.030
	• CF Type 2-3/4" Flange	F2	2.73	-	**KP-112-F2**	5-3/8	4-1/8	-
	• *Kwik-Flange* K150	K4	2.16	NW40	**KP-112-K4**	5-3/8	4-1/8	-
	• *Kwik-Flange* K200	K5	2.95	NW50	**KP-112-K5**	5-3/8	4-1/8	-

See Custom Design information on Pages 6-9.

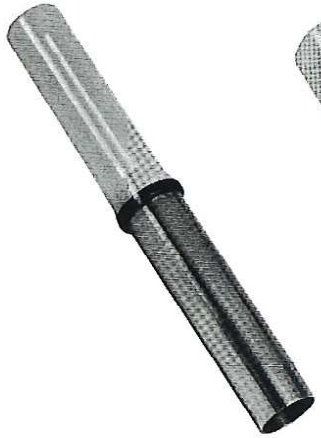

CP-075-T

KP-100-F2

KP-100-K4

Kovar-to-7052 Glass				Copper-to-7740 PYREX			
Model Number	**Lgth L**	**Glass G**	**Metal T**	**Model Number**	**Lgth L**	**Glass G**	**Metal T**
KG-062-T	5-1/4	4-1/8	.030	**CP-062-T**	6	3	.035
KG-062-F1	5-3/8	4-1/8	-	-			
KG-062-K1	5-3/8	4-1/8	-	-			
KG-062-K2	5-3/8	4-1/8	-	-			
KG-075-T	5-1/4	4-1/8	.030	**CP-075-T**	6	3	.035
KG-075-F1	5-3/8	4-1/8	-	-			
KG-075-K1	5-3/8	4-1/8	-	-			
KG-075-K2	5-3/8	4-1/8	-	-			
KG-075-K4	5-3/8	4-1/8	-	-			
KG-087-T	5-1/4	4-1/8	.030	**CP-087-T**	6	3	.035
KG-087-F2	5-3/8	4-1/8	-	-			
KG-087-K2	5-3/8	4-1/8	-	-			
KG-087-K4	5-3/8	4-1/8	-	-			
KG-100-T	5-1/4	4-1/8	.030	**CP-100-T**	6	3	.035
KG-100-F2	5-3/8	4-1/8	-	-			
KG-100-K2	5-3/8	4-1/8	-	-			
KG-100-K4	5-3/8	4-1/8	-	-			
KG-100-K5	5-3/8	4-1/8	-	-			
KG-112-T	5-1/4	4-1/8	.030	**CP-112-T**	6	3	.065
KG-112-F2	5-3/8	4-1/8	-	-			
KG-112-K4	5-3/8	4-1/8	-	-			
KG-112-K5	5-3/8	4-1/8	-	-			

Continued from previous page

LARSON
ELECTRONIC GLASS

Tubular Seals / Adaptors - Kovar & Copper

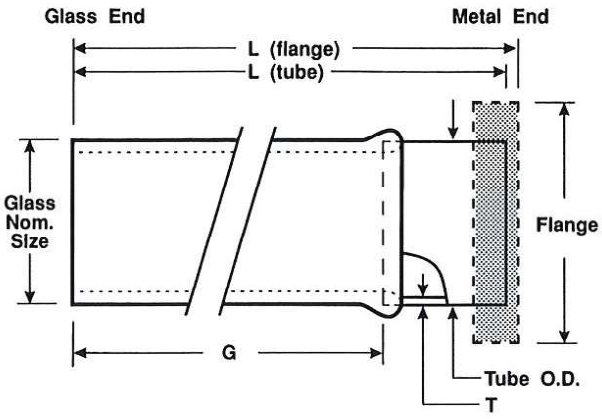

Notes: 1. Dimensions are in inches except where noted.
2. Overall lengths (L) and Glass lengths (G) are nominal ± 1/8 inch.

					Kovar-to-7740 PYREX			
Glass-End Nom Size	Metal-End	Ref	Flange OD	ISO No.	Model Number	Lgth L	Glass G	Metal T
1-1/4"	• 1-1/4" O.D.Tube	T	-	-	**KP-125-T**	5-1/4	4-1/8	.030
	• CF Type 2-3/4" Flange	F2	2.73	-	**KP-125-F2**	5-3/8	4-1/8	-
	• *Kwik-Flange* K150	K4	2.16	NW40	**KP-125-K4**	5-3/8	4-1/8	-
	• *Kwik-Flange* K200	K5	2.95	NW50	**KP-125-K5**	5-3/8	4-1/8	-
1-3/8"	• 1-3/8" O.D.Tube	T	-	-	**KP-137-T**	5-1/4	4-1/8	.030
	• CF Type 2-3/4" Flange	F2	2.73	-	**KP-137-F2**	5-3/8	4-1/8	-
	• *Kwik-Flange* K150	K4	2.16	NW40	**KP-137-K4**	5-3/8	4-1/8	-
	• *Kwik-Flange* K200	K5	2.95	NW50	**KP-137-K5**	5-3/8	4-1/8	-
1-1/2"	• 1-1/2" O.D.Tube	T	-	-	**KP-150-T**	5-1/4	4-1/8	.030
	• CF Type 2-3/4" Flange	F2	2.73	-	**KP-150-F2**	5-3/8	4-1/8	-
	• CF Type 3-3/8" Flange	F3	3.37	-	**KP-150-F3**	5-3/8	4-1/8	-
	• *Kwik-Flange* K150	K4	2.16	NW40	**KP-150-K4**	5-3/8	4-1/8	-
	• *Kwik-Flange* K200	K5	2.95	NW50	**KP-150-K5**	5-3/8	4-1/8	-
2"	• 2" O.D.Tube	T	-	-	**KP-200-T**	5-3/4	4-1/8	.040
	• CF Type 3-3/8" Flange	F3	3.37	-	**KP-200-F3**	5-7/8	4-1/8	-
	• CF Type 4-1/2" Flange	F4	4.47	-	**KP-200-F4**	5-7/8	4-1/8	-
	• *Kwik-Flange* K200	K5	2.95	NW50	**KP-200-K5**	5-7/8	4-1/8	-
	• *Large-Flange* L250	L6	3.74	NW63	**KP-200-L6**	5-7/8	4-1/8	-
2-1/4"	• 2-1/4" O.D.Tube	T	-	-	**KP-225-T**	5-3/4	4-1/8	.040
	• CF Type 4-1/2" Flange	F4	4.47	-	**KP-225-F4**	5-7/8	4-1/8	-
	• *Large-Flange* L250	L6	3.74	NW63	**KP-225-L6**	5-7/8	4-1/8	-
	• *Large-Flange* L300	L8	4.33	NW80	**KP-225-L8**	5-7/8	4-1/8	-

See Custom Design information on Pages 6-9.

KG-150-T KP-150-F2 KP-150-K4

Kovar-to-7052 Glass				Copper-to-7740 PYREX			
Model Number	**Lgth L**	**Glass G**	**Metal T**	**Model Number**	**Lgth L**	**Glass G**	**Metal T**
KG-125-T	5-1/4	4-1/8	.030	**CP-125-T**	6	3	.065
KG-125-F2	5-3/8	4-1/8	-	-			
KG-125-K4	5-3/8	4-1/8	-	-			
KG-125-K5	5-3/8	4-1/8	-	-			
KG-137-T	5-1/4	4-1/8	.030	**CP-137-T**	6	3	.065
KG-137-F2	5-3/8	4-1/8	-	-			
KG-137-K4	5-3/8	4-1/8	-	-			
KG-137-K5	5-3/8	4-1/8	-	-			
KG-150-T	5-1/4	4-1/8	.030	**CP-150-T**	6	3	.065
KG-150-F2	5-3/8	4-1/8	-	-			
KG-150-F3	5-3/8	4-1/8	-	-			
KG-150-K4	5-3/8	4-1/8	-	-			
KG-150-K5	5-3/8	4-1/8	-	-			
KG-200-T	5-3/4	4-1/8	.040	**CP-200-T**	6	3	.065
KG-200-F3	5-7/8	4-1/8	-	-			
KG-200-F4	5-7/8	4-1/8	-	-			
KG-200-K5	5-7/8	4-1/8	-	-			
KG-200-L6	5-7/8	4-1/8	-	-			
				CP-225-T	6	3	.065
				-			
				-			
				-			

Continued from previous page

LARSON
ELECTRONIC GLASS

Tubular Seals / Adaptors - Kovar & Copper

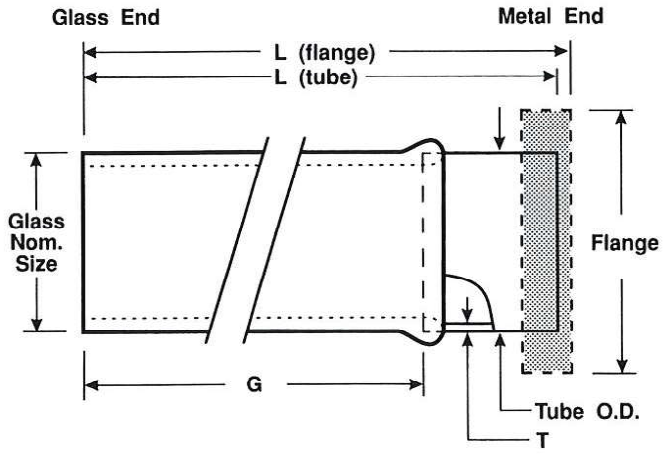

Notes: 1. Dimensions are in inches except where noted.
2. Overall lengths (L) and Glass lengths (G) are nominal ± 1/8 inch.

Glass-End Nom Size	Metal-End	Ref	Flange OD	ISO No.	Kovar-to-7740 PYREX Model Number	Lgth L	Glass G	Metal T
2-1/2"	• 2-1/2" O.D. Tube	T	-	-	KP-250-T	7-3/8	5-3/4	.040
	• CF Type 4-1/2" Flange	F4	4.47	-	KP-250-F4	7-1/2	5-3/4	-
	• *Large-Flange* L250	L6	3.74	NW63	KP-250-L6	7-1/2	5-3/4	-
	• *Large-Flange* L300	L8	4.33	NW80	KP-250-L8	7-1/2	5-3/4	-
3"	• 3" O.D. Tube	T	-	-	KP-300-T	7-3/8	5-3/4	.040
	• CF Type 4-5/8" Flange	F5	4.62	-	KP-300-F5	7-1/2	5-3/4	-
	• CF Type 6" Flange	F6	5.97	-	KP-300-F6	7-1/2	5-3/4	-
	• *Large-Flange* L300	L8	4.33	NW80	KP-300-L8	7-1/2	5-3/4	-
	• *Large-Flange* L400	L10	5.12	NW100	KP-300-L10	7-1/2	5-3/4	-
4"	• 4" O.D.Tube	T	-	-	KP-400-T	10	8	.030
	• CF Type 6" Flange	F6	5.97	-	KP-400-F6	10-1/8	8	-
	• *Large-Flange* L400	L10	5.12	NW100	KP-400-L10	10-1/8	8	-
	• *Large-Flange* L600	L16	7.09	NW160	KP-400-L16	10-1/8	8	-
5"	• 5" O.D.Tube	T	-	-	KP-500-T	10-1/2	8	.040
	• CF Type 6-3/4" Flange	F7	6.75	-	KP-500-F7	10-5/8	8	-
	• *Large-Flange* L600	L16	7.09	NW160	KP-500-L16	10-5/8	8	-
	• *Large-Flange* L800	L20	9.45	NW200	KP-500-L20	10-5/8	8	-
6"	• 6" O.D.Tube	T	-	-	KP-600-T	10-1/2	8	.040
	• CF Type 8" Flange	F8	7.97	-	KP-600-F8	10-5/8	8	-
	• *Large-Flange* L600	L16	7.09	NW160	KP-600-L16	10-5/8	8	-
	• *Large-Flange* L800	L20	9.45	NW200	KP-600-L20	10-5/8	8	-

See Custom Design information on Pages 6-9.

KG-250-T KP-250-F4 KP-300-L8

Kovar-to-7052 Glass				Copper-to-7740 PYREX			
Model Number	Lgth L	Glass G	Metal T	Model Number	Lgth L	Glass G	Metal T
KG-250-T	7-3/8	5-3/4	.040	**CP-250-T**	6	3	.065
KG-250-F4	7-1/2	5-3/4	-	-			
KG-250-L6	7-1/2	5-3/4	-	-			
KG-250-L8	7-1/2	5-3/4	-	-			
KG-300-T	7-3/8	5-3/4	.040	-			
KG-300-F5	7-1/2	5-3/4	-	-			
KG-300-F6	7-1/2	5-3/4	-	-			
KG-300-L8	7-1/2	5-3/4	-	-			
KG-300-L10	7-1/2	5-3/4	-	-			
KG-400-T	10	8	.030	-			
KG-400-F6	10-1/8	8	-	-			
KG-400-L10	10-1/8	8	-	-			
KG-400-L16	10-1/8	8	-	-			
KG-500-T	10-1/2	8	.040	-			
KG-500-F7	10-5/8	8	-	-			
KG-500-L16	10-5/8	8	-	-			
KG-500-L20	10-5/8	8	-	-			
KG-600-T	10-1/2	8	.040	-			
KG-600-F8	10-5/8	8	-	-			
KG-600-L16	10-5/8	8	-	-			
KG-600-L20	10-5/8	8	-	-			

Continued from previous page

LARSON
ELECTRONIC GLASS

Tubular Seals / Adaptors - Stainless Steel

FEATURES

- 27 Sizes from 3/16 thru 6 inch
- Choice of 304 Stainless Steel-to-
  - 7740 PYREX
  - 7052 Glass
  - Quartz
  - Special Glass
- Choice of SS-metal-end vacuum seal:
  Tube End — ISO *Large-Flange*
  CF Type Flange — Custom Flange
  ISO *Kwik-Flange*
- CF Type Flange repeat bakeout cycles to 450°C[5]
- CF Type Flange vacuum range to below 10^{-11} torr.
- ISO flange intermittent bakeout cycles to 200°C[6]
- ISO flange vacuum range to 10^{-9} torr.

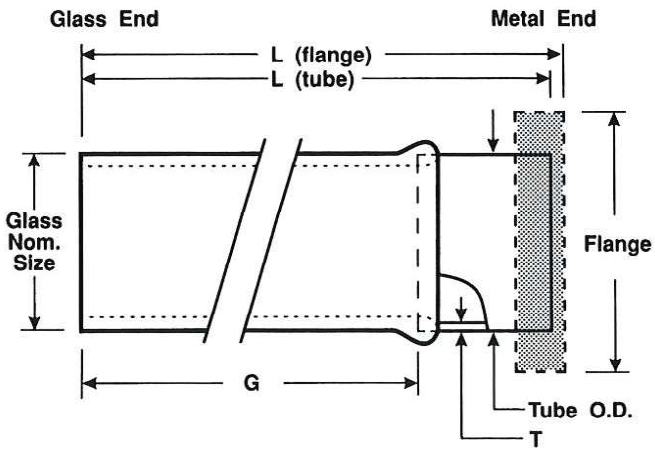

Notes:

1. Dimensions are in inches except where noted.
2. Overall lengths (L) and Glass lengths (G) are nominal ± 1/8 inch.
3. End of SS .065 wall (T) tubular-seals are thinned to .030 for welding.
4. (G) includes Quartz plus graded seal section. Up to 1-1/2 OD sizes, Quartz is approx. 3" long; 1-3/4 OD and larger sizes, Quartz is 3-1/2" long.
5. 304 SS-to-7052 Glass (Tube & CF Flange models) bakeout to 400°C.
6. Repeat bakeout cycles will require periodic replacement of O-rings.

					304 Stainless Steel-to-7740 PYREX			
Glass-End Nom Size	Metal-End	Ref	Flange OD	ISO No.	Model Number	Lgth L	Glass G	Metal T
3/16"	• 3/16" O.D. Tube	T	-	-	SP-018-T	4-3/4	3	.010
	• CF Type 1-1/3" Flange	F1	1.33	-	SP-018-F1	4-7/8	3	-
	• *Kwik-Flange* K075	K1	1.18	NW16	SP-018-K1	4-7/8	3	-
1/4"	• 1/4" O.D. Tube	T	-	-	SP-025-T	4-3/4	3	.020
	• CF Type 1-1/3" Flange	F1	1.33	-	SP-025-F1	4-7/8	3	-
	• *Kwik-Flange* K075	K1	1.18	NW16	SP-025-K1	4-7/8	3	-
5/16"	• 5/16" O.D. Tube	T	-	-	SP-031-T	4-3/4	3	.020
	• CF Type 1-1/3" Flange	F1	1.33	-	SP-031-F1	4-7/8	3	-
	• *Kwik-Flange* K075	K1	1.18	NW16	SP-031-K1	4-7/8	3	-
3/8"	• 3/8" O.D. Tube	T	-	-	SP-037-T	4-3/4	3	.035
	• CF Type 1-1/3" Flange	F1	1.33	-	SP-037-F1	4-7/8	3	-
	• *Kwik-Flange* K075	K1	1.18	NW16	SP-037-K1	4-7/8	3	-
1/2"	• 1/2" O.D.Tube	T	-	-	SP-050-T	4-3/4	3	.035
	• CF Type 1-1/3" Flange	F1	1.33	-	SP-050-F1	4-7/8	3	-
	• *Kwik-Flange* K075	K1	1.18	NW16	SP-050-K1	4-7/8	3	-
	• *Kwik-Flange* K100	K2	1.57	NW25	SP-050-K2	4-7/8	3	-

See Custom Design information on pages 6-9.

SG-037-T

SP-050-F1

SG-050-K2

304 Stainless Steel-to-7052 Glass[5]

Model Number	Lgth L	Glass G	Metal T
SG-018-T	5	3-1/4	.010
SG-018-F1	5-1/8	3-1/4	-
SG-018-K1	5-1/8	3-1/4	-
SG-025-T	5	3-1/4	.020
SG-025-F1	5-1/8	3-1/4	-
SG-025-K1	5-1/8	3-1/4	-
SG-031-T	5	3-1/4	.020
SG-031-F1	5-1/8	3-1/4	-
SG-031-K1	5-1/8	3-1/4	-
SG-037-T	5	3-1/4	.035
SG-037-F1	5-1/8	3-1/4	-
SG-037-K1	5-1/8	3-1/4	-
SG-050-T	5	3-1/4	.035
SG-050-F1	5-1/8	3-1/4	-
SG-050-K1	5-1/8	3-1/4	-
SG-050-K2	5-1/8	3-1/4	-

Continued from previous page

LARSON
ELECTRONIC GLASS

Tubular Seals / Adaptors - Stainless Steel

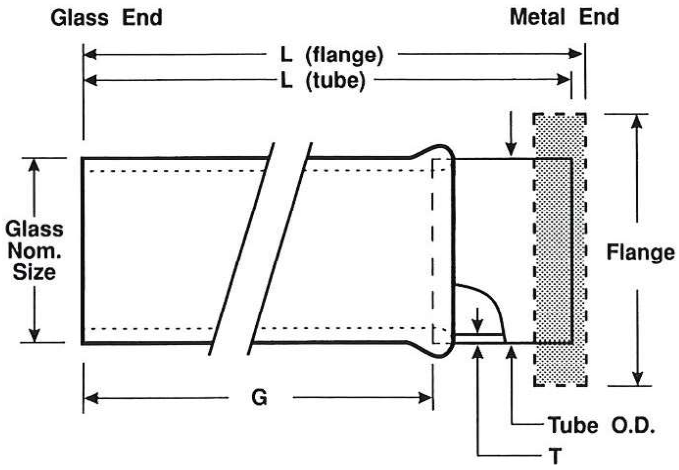

Notes:

1. Dimensions are in inches except where noted.
2. Overall lengths (L) and Glass lengths (G) are nominal ± 1/8 inch.
3. End of SS .065 wall (T) tubular-seals are thinned to .030 for welding.
4. (G) includes Quartz plus graded seal section. Up to 1-1/2 OD sizes, Quartz is approx. 3" long; 1-3/4 OD and larger sizes, Quartz is 3-1/2" long.
5. 304 SS-to-7052 Glass (Tube & CF Flange models) bakeout to 400°C.

					304 Stainless Steel-to-7740 PYREX			
Glass-End Nom Size	Metal-End	Ref	Flange OD	ISO No.	Model Number	Lgth L	Glass G	Metal T(3)
5/8"	• 5/8" O.D. Tube	T	-	-	SP-062-T	4-3/4	3	.035
	• CF Type 1-1/3" Flange	F1	1.33	-	SP-062-F1	4-7/8	3	-
	• *Kwik-Flange* K075	K1	1.18	NW16	SP-062-K1	4-7/8	3	-
	• *Kwik-Flange* K100	K2	1.57	NW25	SP-062-K2	4-7/8	3	-
3/4"	• 3/4" O.D. Tube	T	-	-	SP-075-T	4-3/4	3	.035
	• CF Type 1-1/3" Flange	F1	1.33	-	SP-075-F1	4-7/8	3	-
	• *Kwik-Flange* K075	K1	1.18	NW16	SP-075-K1	4-7/8	3	-
	• *Kwik-Flange* K100	K2	1.57	NW25	SP-075-K2	4-7/8	3	-
	• *Kwik-Flange* K150	K4	2.16	NW40	SP-075-K4	4-7/8	3	-
7/8"	• 7/8" O.D. Tube	T	-	-	SP-087-T	4-3/4	3	.035
	• CF Type 2-3/4" Flange	F2	2.73	-	SP-087-F2	4-7/8	3	-
	• *Kwik-Flange* K100	K2	1.57	NW25	SP-087-K2	4-7/8	3	-
	• *Kwik-Flange* K150	K4	2.16	NW40	SP-087-K4	4-7/8	3	-
1"	• 1" O.D.Tube	T	-	-	SP-100-T	4-3/4	3	.035
	• CF Type 2-3/4" Flange	F2	2.73	-	SP-100-F2	4-7/8	3	-
	• *Kwik-Flange* K100	K2	1.57	NW25	SP-100-K2	4-7/8	3	-
	• *Kwik-Flange* K150	K4	2.16	NW40	SP-100-K4	4-7/8	3	-
	• *Kwik-Flange* K200	K5	2.95	NW50	SP-100-K5	4-7/8	3	-
1-1/8"	• 1-1/8" O.D.Tube	T	-	-	SP-112-T	4-3/4	3	.065
	• CF Type 2-3/4" Flange	F2	2.73	-	SP-112-F2	4-7/8	3	-
	• *Kwik-Flange* K150	K4	2.16	NW40	SP-112-K4	4-7/8	3	-
	• *Kwik-Flange* K200	K5	2.95	NW50	SP-112-K5	4-7/8	3	-

See Custom Design information on pages 6-9.

SG-075-T SQ-100-T SP-087-F2 SP-075-K1

304 Stainless Steel-to-7052 Glass[5]

Model Number	Lgth L	Glass G	Metal T[3]
SG-062-T	5	3-1/4	.035
SG-062-F1	5-1/8	3-1/4	-
SG-062-K1	5-1/8	3-1/4	-
SG-062-K2	5-1/8	3-1/4	-
SG-075-T	5	3-1/4	.035
SG-075-F1	5-1/8	3-1/4	-
SG-075-K1	5-1/8	3-1/4	-
SG-075-K2	5-1/8	3-1/4	-
SG-075-K4	5-1/8	3-1/4	-
SG-087-T	5	3-1/4	.035
SG-087-F2	5-1/8	3-1/4	-
SG-087-K2	5-1/8	3-1/4	-
SG-087-K4	5-1/8	3-1/4	-
SG-100-T	5	3-1/4	.035
SG-100-F2	5-1/8	3-1/4	-
SG-100-K2	5-1/8	3-1/4	-
SG-100-K4	5-1/8	3-1/4	-
SG-100-K5	5-1/8	3-1/4	-
SG-112-T	5	3-1/4	.065
SG-112-F2	5-1/8	3-1/4	-
SG-112-K4	5-1/8	3-1/4	-
SG-112-K5	5-1/8	3-1/4	-

Continued from previous page

LARSON
ELECTRONIC GLASS

Tubular Seals / Adaptors - Stainless Steel

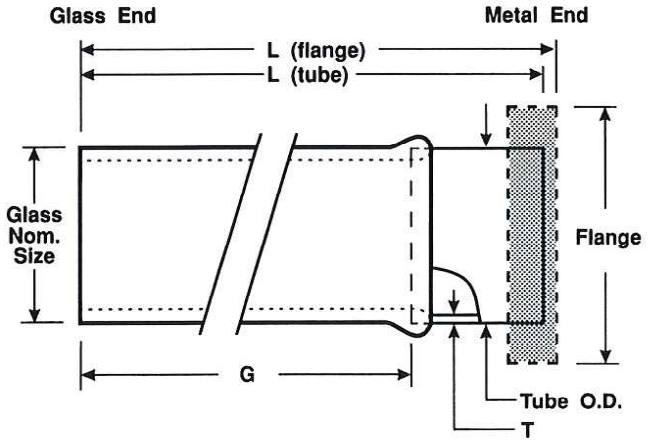

Notes:

1. Dimensions are in inches except where noted.
2. Overall lengths (L) and Glass lengths (G) are nominal ± 1/8 inch.
3. End of SS .065 wall (T) tubular-seals are thinned to .030 for welding.
4. (G) includes Quartz plus graded seal section. Up to 1-1/2 OD sizes, Quartz is approx. 3" long; 1-3/4 OD and larger sizes, Quartz is 3-1/2" long.
5. 304 SS-to-7052 Glass (Tube & CF Flange models) bakeout to 400°C.

					304 Stainless Steel-to-7740 PYREX			
Glass-End Nom Size	Metal-End	Ref	Flange OD	ISO No.	Model Number	Lgth L	Glass G	Metal T(3)
1-1/4"	• 1-1/4" O.D.Tube	T	-	-	SP-125-T	4-3/4	3	.065
	• CF Type 2-3/4" Flange	F2	2.73	-	SP-125-F2	4-7/8	3	-
	• *Kwik-Flange* K150	K4	2.16	NW40	SP-125-K4	4-7/8	3	-
	• *Kwik-Flange* K200	K5	2.95	NW50	SP-125-K5	4-7/8	3	-
1-3/8"	• 1-3/8" O.D.Tube	T	-	-	SP-137-T	4-3/4	3	.065
	• CF Type 2-3/4" Flange	F2	2.73	-	SP-137-F2	4-7/8	3	-
	• *Kwik-Flange* K150	K4	2.16	NW40	SP-137-K4	4-7/8	3	-
	• *Kwik-Flange* K200	K5	2.95	NW50	SP-137-K5	4-7/8	3	-
1-1/2"	• 1-1/2" O.D.Tube	T	-	-	SP-150-T	4-3/4	3	.065
	• CF Type 2-3/4" Flange	F2	2.73	-	SP-150-F2	4-7/8	3	-
	• CF Type 3-3/8" Flange	F3	3.37	-	SP-150-F3	4-7/8	3	-
	• *Kwik-Flange* K150	K4	2.16	NW40	SP-150-K4	4-7/8	3	-
	• *Kwik-Flange* K200	K5	2.95	NW50	SP-150-K5	4-7/8	3	-
1-5/8"	• 1-5/8" O.D.Tube	T	-	-	SP-162-T	4-3/4	3	.065
	• CF Type 3-3/8" Flange	F3	3.37	-	SP-162-F3	4-7/8	3	-
	• *Kwik-Flange* K200	K5	2.95	NW50	SP-162-K5	4-7/8	3	-
1-3/4"	• 1-3/4" O.D. Tube	T	-	-	SP-175-T	4-3/4	3	.065
	• CF Type 3-3/8" Flange	F3	3.37	-	SP-175-F3	4-7/8	3	-
	• *Kwik-Flange* K200	K5	2.95	NW50	SP-175-K5	4-7/8	3	-

See Custom Design information on pages 6-9.

SG-137-T

SQ-125-F2

SP-150-K4

304 Stainless Steel-to-7052 Glass[5]

Model Number	Lgth L	Glass G	Metal T[3]
SG-125-T	5	3-1/4	.065
SG-125-F2	5-1/8	3-1/4	-
SG-125-K4	5-1/8	3-1/4	-
SG-125-K5	5-1/8	3-1/4	-
SG-137-T	5	3-1/4	.065
SG-137-F2	5-1/8	3-1/4	-
SG-137-K4	5-1/8	3-1/4	-
SG-137-K5	5-1/8	3-1/4	-
SG-150-T	5	3-1/4	.065
SG-150-F2	5-1/8	3-1/4	-
SG-150-F3	5-1/8	3-1/4	-
SG-150-K4	5-1/8	3-1/4	-
SG-150-K5	5-1/8	3-1/4	-
-			
-			
-			
SG-175-T	5	3-1/4	.065
SG-175-F3	5-1/8	3-1/4	-
SG-175-K5	5-1/8	3-1/4	-

Continued from previous page

LARSON
ELECTRONIC GLASS

Tubular Seals / Adaptors - Stainless Steel

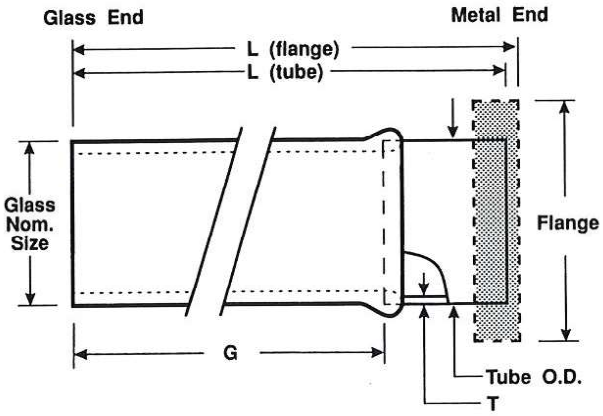

Notes:

1. Dimensions are in inches except where noted.
2. Overall lengths (L) and Glass lengths (G) are nominal ± 1/8 inch.
3. End of SS .065 wall (T) tubular-seals are thinned to .030 for welding.
4. (G) includes Quartz plus graded seal section. Up to 1-1/2 OD sizes, Quartz is approx. 3" long; 1-3/4 OD and larger sizes, Quartz is 3-1/2" long.
5. 304 SS-to-7052 Glass (Tube & CF Flange models) bakeout to 400°C.

					304 Stainless Steel-to-7740 PYREX			
Glass-End Nom Size	**Metal-End**	**Ref**	**Flange OD**	**ISO No.**	**Model Number**	**Lgth L**	**Glass G**	**Metal T(3)**
2"	• 2" O.D. Tube	T	-	-	**SP-200-T**	5-1/4	3	.065
	• CF Type 3-3/8" Flange	F3	3.37	-	**SP-200-F3**	5-3/8	3	-
	• CF Type 4-1/2" Flange	F4	4.47	-	**SP-200-F4**	5-3/8	3	-
	• *Kwik-Flange* K200	K5	2.95	NW50	**SP-200-K5**	5-3/8	3	-
	• *Large-Flange* L250	L6	3.74	NW63	**SP-200-L6**	5-3/8	3	-
2-1/4"	• 2-1/4" O.D. Tube	T	-	-	**SP-225-T**	5-1/4	3	.065
	• CF Type 4-1/2" Flange	F4	4.47	-	**SP-225-F4**	5-3/8	3	-
	• *Large-Flange* L250	L6	3.74	NW63	**SP-225-L6**	5-3/8	3	-
	• *Large-Flange* L300	L8	4.33	NW80	**SP-225-L8**	5-3/8	3	-
2-1/2"	• 2-1/2" O.D. Tube	T	-	-	**SP-250-T**	5-1/4	3	.065
	• CF Type 4-1/2" Flange	F4	4.47	-	**SP-250-F4**	5-3/8	3	-
	• *Large-Flange* L250	L6	3.74	NW63	**SP-250-L6**	5-3/8	3	-
	• *Large-Flange* L300	L8	4.33	NW80	**SP-250-L8**	5-3/8	3	-
2-3/4"	• 2-3/4" O.D. Tube	T	-	-	**SP-275-T**	5-1/4	3	.065
	• CF Type 4-5/8" Flange	F5	4.62	-	**SP-275-F5**	5-3/8	3	-
	• *Large-Flange* L300	L8	4.33	NW80	**SP-275-L8**	5-3/8	3	-
3"	• 3" O.D. Tube	T	-	-	**SP-300-T**	6-1/4	4	.065
	• CF Type 4-5/8" Flange	F5	4.62	-	**SP-300-F5**	6-3/8	4	-
	• CF Type 6" Flange	F6	5.97	-	**SP-300-F6**	6-3/8	4	-
	• *Large-Flange* L300	L8	4.33	NW80	**SP-300-L8**	6-3/8	4	-
	• *Large-Flange* L400	L10	5.12	NW100	**SP-300-L10**	6-3/8	4	-

See Custom Design information on pages 6-9.

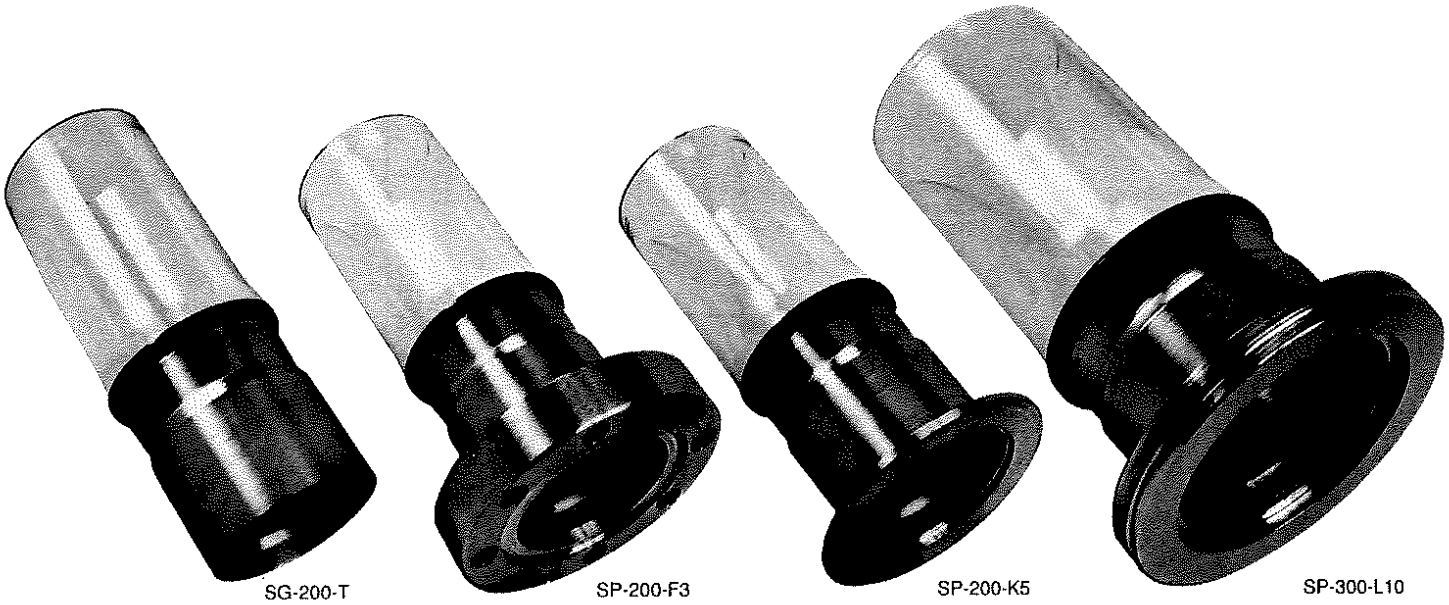

304 Stainless Steel-to-7052 Glass[5]

Model Number	Lgth L	Glass G	Metal T[3]
SG-200-T	5-3/4	3-1/2	.065
SG-200-F3	5-7/8	3-1/2	-
SG-200-F4	5-7/8	3-1/2	-
SG-200-K5	5-7/8	3-1/2	-
SG-200-L6	5-7/8	3-1/2	-
-			
-			
-			
-			
SG-250-T	5-3/4	3-1/2	.065
SG-250-F4	5-7/8	3-1/2	-
SG-250-L6	5-7/8	3-1/2	-
SG-250-L8	5-7/8	3-1/2	-
-			
-			
-			
SG-300-T	6-3/4	4-1/2	.065
SG-300-F5	6-7/8	4-1/2	-
SG-300-F6	6-7/8	4-1/2	-
SG-300-L8	6-7/8	4-1/2	-
SG-300-L10	6-7/8	4-1/2	-

Continued from previous page

LARSON
ELECTRONIC GLASS

Tubular Seals / Adaptors - Stainless Steel

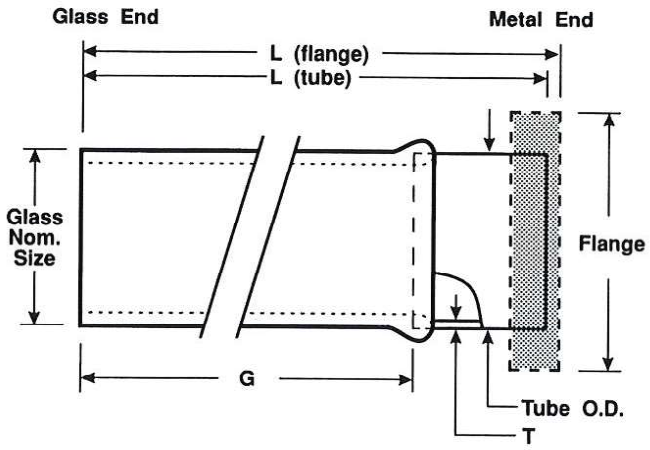

Notes:

1. Dimensions are in inches except where noted.
2. Overall lengths (L) and Glass lengths (G) are nominal ± 1/8 inch.
3. End of SS .065 wall (T) tubular-seals are thinned to .030 for welding.
4. (G) includes Quartz plus graded seal section. Up to 1-1/2 OD sizes, Quartz is approx. 3" long; 1-3/4 OD and larger sizes, Quartz is 3-1/2" long.
5. 304 SS-to-7052 Glass (Tube & CF Flange models) bakeout to 400°C.

					304 Stainless Steel-to-7740 PYREX			
Glass-End Nom Size	Metal-End	Ref	Flange OD	ISO No.	Model Number	Lgth L	Glass G	Metal T(3)
3-1/4"	• 3-1/4" O.D. Tube	T	-	-	SP-325-T	6-1/4	4	.065
	• CF Type 6" Flange	F6	5.97	-	SP-325-F6	6-3/8	4	-
	• *Large-Flange* L400	L10	5.12	NW100	SP-325-L10	6-3/8	4	-
3-1/2"	• 3-1/2" O.D. Tube	T	-	-	SP-350-T	6-1/4	4	.065
	• CF Type 6" Flange	F6	5.97	-	SP-350-F6	6-3/8	4	-
	• *Large-Flange* L400	L10	5.12	NW100	SP-350-L10	6-3/8	4	-
3-3/4"	• 3-3/4" O.D. Tube	T	-	-	SP-375-T	6-1/4	4	.065
	• CF Type 6" Flange	F6	5.97	-	SP-375-F6	6-3/8	4	-
	• *Large-Flange* L400	L10	5.12	NW100	SP-375-L10	6-3/8	4	-
	• *Large-Flange* L600	L16	7.09	NW160	SP-375-L16	6-3/8	4	-
4"	• 4" O.D. Tube	T	-	-	SP-400-T	6-1/4	4	.065
	• CF Type 6" Flange	F6	5.97	-	SP-400-F6	6-3/8	4	-
	• *Large-Flange* L400	L10	5.12	NW100	SP-400-L10	6-3/8	4	-
	• *Large-Flange* L600	L16	7.09	NW160	SP-400-L16	6-3/8	4	-
5"	• 5" O.D. Tube	T	-	-	SP-500-T	8-1/4	6	.065
	• CF Type 6-3/4" Flange	F7	6.75	-	SP-500-F7	8-3/8	6	-
	• *Large-Flange* L600	L16	7.09	NW160	SP-500-L16	8-3/8	6	-
	• *Large-Flange* L800	L20	9.45	NW200	SP-500-L20	8-3/8	6	-
6"	• 6" O.D. Tube	T	-	-	SP-600-T	8-1/4	6	.065
	• CF Type 8" Flange	F8	7.97	-	SP-600-F8	8-3/8	6	-
	• *Large-Flange* L600	L16	7.09	NW160	SP-600-L16	8-3/8	6	-
	• *Large-Flange* L800	L20	9.45	NW200	SP-600-L20	8-3/8	6	-

See Custom Design information on pages 6-9.

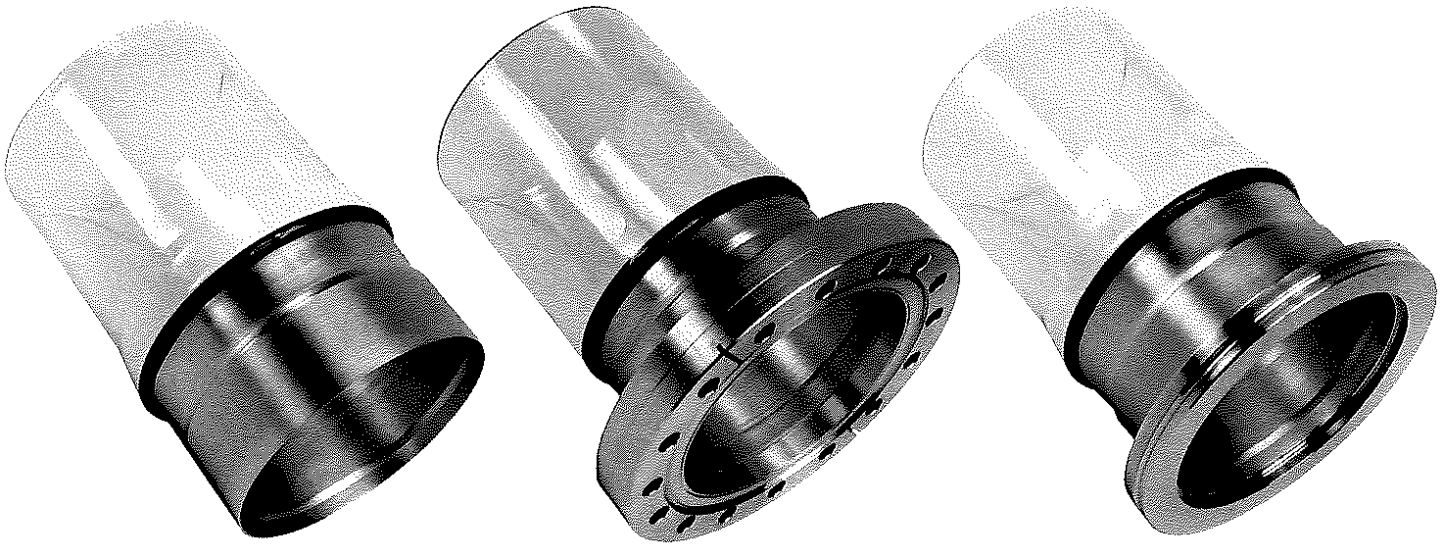

SG-400-T SP-400-F6 SP-400-L10

304 Stainless Steel-to-7052 Glass[5]

Model Number	Lgth L	Glass G	Metal T[3]
-			
-			
-			
-			
-			
-			
-			
-			
-			
SG-400-T	6-3/4	4-1/2	.065
SG-400-F6	6-7/8	4-1/2	-
SG-400-L10	6-7/8	4-1/2	-
SG-400-L16	6-7/8	4-1/2	-
SG-500-T	8-3/4	6-1/2	.065
SG-500-F7	8-7/8	6-1/2	-
SG-500-L16	8-7/8	6-1/2	-
SG-500-L20	8-7/8	6-1/2	-
SG-600-T	8-3/4	6-1/2	.065
SG-600-F8	8-7/8	6-1/2	-
SG-600-L16	8-7/8	6-1/2	-
SG-600-L20	8-7/8	6-1/2	-

Continued from previous page

See Custom Design information on pages 6-9.

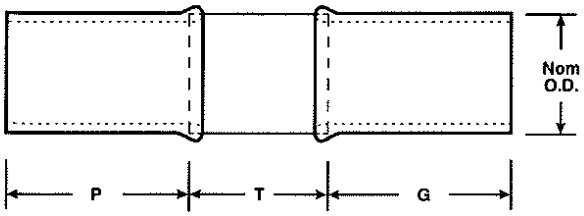

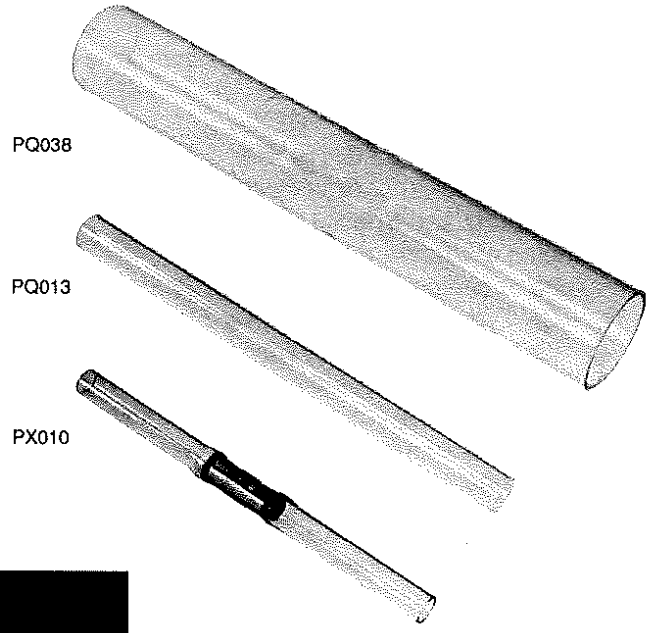

PYREX-to-Soft Glass Seals
with Stainless Steel Transition Section

Nom OD	OD mm	Model Number	PYREX P	Transition T	Glass G
-	-				
-	-				
-	-				
-	-				
-	-				
-	9	PX009	4	1-1/4	3
3/8"	10	PX010	4	1-1/4	3
-	-				
-	-				
1/2"	13	PX013	4	1-1/2	3
-	-				
-	-				
5/8"	16	PX016	4	1-1/2	3
-	-				
-	-				
3/4"	19	PX019	4	1-3/4	3
-	-				
-	-				
-	-				
-	-				
-	-				
-	-				
-	-				
-	-				
-	-				
-	-				
-	-				
-	-				
-	-				

Continued from previous page

LARSON
ELECTRONIC GLASS

Double Ended Glass Adaptors

FEATURES

- 10 standard sizes 1/2 thru 6"; Custom sizes available
- Choice of materials:
  - 304 SS-to-7740 PYREX
  - Kovar-to-7052 Glass
  - Kovar-to-7052 Glass with Bellows at one end
  - Quartz and Special Glass available
- Choice of Standard Length (L1) & Long Length (L2)
- Tube or choice of flanges at both ends:
  CF Type Flanges, ISO *Kwik-Flange,*
  ISO *Large-Flange,* or Custom Flanges
- CF Type Flange repeat bakeout cycles to 400°C[4]
- CF Type Flange vacuum range to below 10^{-11} torr.
- ISO flange intermittent bakeout cycles to 200°C[5]
- ISO flange vacuum range to 10^{-9} torr.

Fig. 1

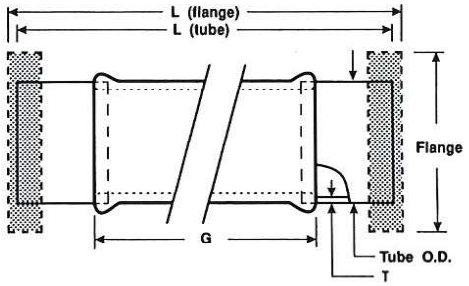

Fig. 2

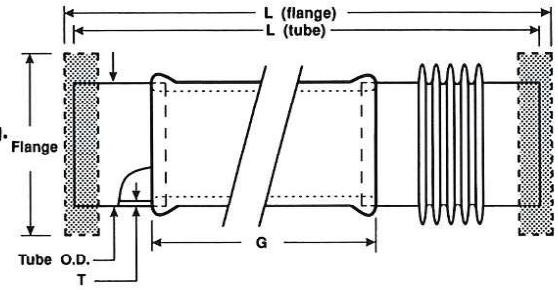

Notes:

1. Dimensions are in inches except where noted.
2. Overall lengths (L) and Glass lengths (G) are nominal ± 1/8 inch.
3. End of SS .065 wall (T) tubular-seals are thinned to .030 for welding.
4. 304 SS-to-PYREX (Tube and CF Flange models) bakeable to 450°C.
5. Repeat bakeout cycles will require periodic replacement of O-rings.

Kovar-to-7052 Glass-to-Kovar

Nom Size	Glass Nom ID	Description Both Ends	Ref	Flange OD	ISO No.	Model Number	Fig #	Lgth L	Glass G	Metal T
1/2"	• 5/16	1/2" O.D. Tube	T-L1	-	-	KGK-050-T-L1	1	2-7/8	1	.030
	• 5/16	1/2" O.D. Tube	T-L2	-	-	KGK-050-T-L2	1	7-7/8	6	.030
	• 5/16	CF 1-1/3" Flange	F1-L1	1.33	-	KGK-050-F1-L1	1	3	1	-
	• 5/16	CF 1-1/3" Flange	F1-L2	1.33	-	KGK-050-F1-L2	1	8	6	-
	• 5/16	*Kwik-Flange* K075	K1-L1	1.18	NW16	KGK-050-K1-L1	1	3	1	-
	• 5/16	*Kwik-Flange* K075	K1-L2	1.18	NW16	KGK-050-K1-L2	1	8	6	-
	• 5/16	*Kwik-Flange* K100	K2-L1	1.57	NW25	KGK-050-K2-L1	1	3	1	-
	• 5/16	*Kwik-Flange* K100	K2-L2	1.57	NW25	KGK-050-K2-L2	1	8	6	-
3/4"	• 9/16	3/4" O.D. Tube	T-L1	-	-	KGK-075-T-L1	1	2-7/8	1	.030
	• 9/16	3/4" O.D. Tube	T-L2	-	-	KGK-075-T-L2	1	7-7/8	6	.030
	• 9/16	CF 1-1/3" Flange	F1-L1	1.33	-	KGK-075-F1-L1	1	3	1	-
	• 9/16	CF 1-1/3" Flange	F1-L2	1.33	-	KGK-075-F1-L2	1	8	6	-
	• 9/16	*Kwik-Flange* K075	K1-L1	1.18	NW16	KGK-075-K1-L1	1	3	1	-
	• 9/16	*Kwik-Flange* K075	K1-L2	1.18	NW16	KGK-075-K1-L2	1	8	6	-
	• 9/16	*Kwik-Flange* K100	K2-L1	1.57	NW25	KGK-075-K2-L1	1	3	1	-
	• 9/16	*Kwik-Flange* K100	K2-L2	1.57	NW25	KGK-075-K2-L2	1	8	6	-
	• 9/16	*Kwik-Flange* K150	K4-L1	2.16	NW40	KGK-075-K4-L1	1	3	1	-
	• 9/16	*Kwik-Flange* K150	K4-L2	2.16	NW40	KGK-075-K4-L2	1	8	6	-
1"	• 13/16	1" O.D. Tube	T-L1	-	-	KGK-100-T-L1	1	2-7/8	1	.030
	• 13/16	1" O.D. Tube	T-L2	-	-	KGK-100-T-L2	1	7-7/8	6	.030
	• 13/16	CF 2-3/4" Flange	F2-L1	2.73	-	KGK-100-F2-L1	1	3	1	-
	• 13/16	CF 2-3/4" Flange	F2-L2	2.73	-	KGK-100-F2-L2	1	8	6	-
	• 13/16	*Kwik-Flange* K100	K2-L1	1.57	NW25	KGK-100-K2-L1	1	3	1	-
	• 13/16	*Kwik-Flange* K100	K2-L2	1.57	NW25	KGK-100-K2-L2	1	8	6	-
	• 13/16	*Kwik-Flange* K150	K4-L1	2.16	NW40	KGK-100-K4-L1	1	3	1	-
	• 13/16	*Kwik-Flange* K150	K4-L2	2.16	NW40	KGK-100-K4-L2	1	8	6	-
	• 13/16	*Kwik-Flange* K200	K5-L1	2.95	NW50	KGK-100-K5-L1	1	3	1	-
	• 13/16	*Kwik-Flange* K200	K5-L2	2.95	NW50	KGK-100-K5-L2	1	8	6	-

See Custom Design information on pages 6-9.

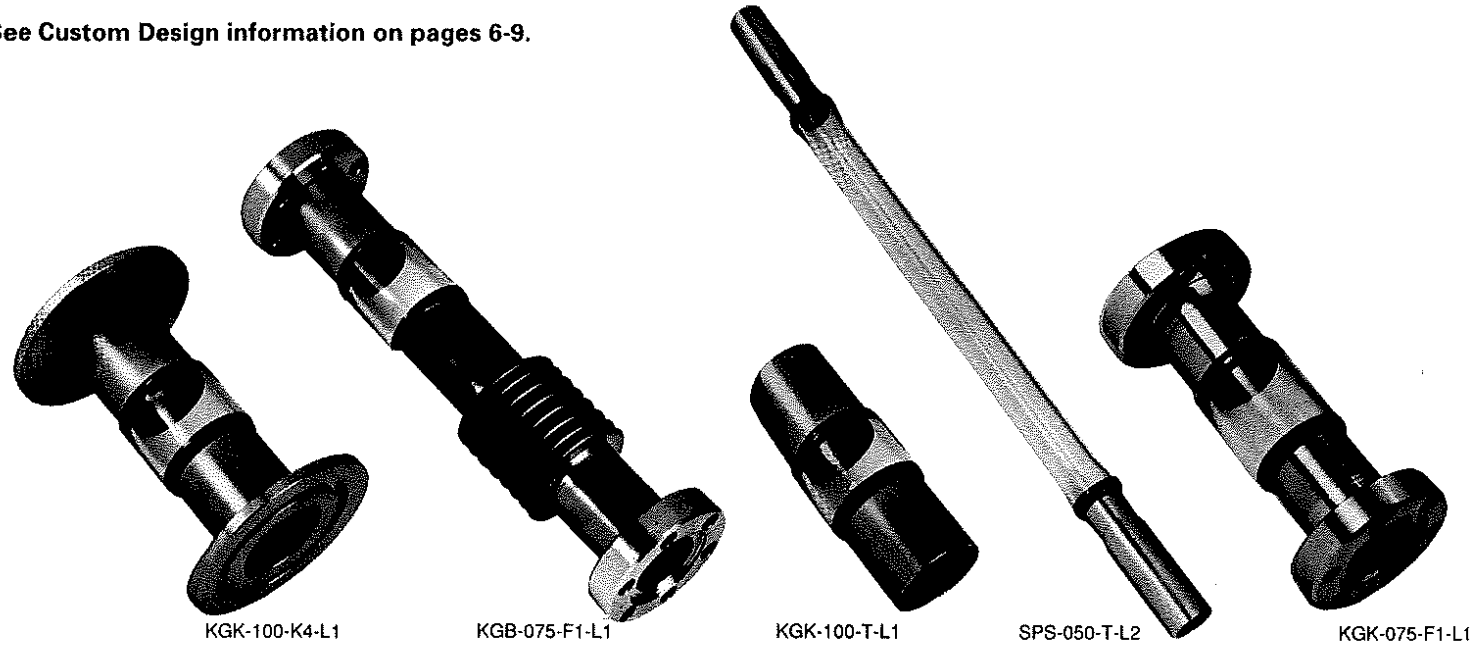

Kovar-to-7052 Glass-to-Bellows

Bellows 1" Flex Lgth., .006 Thick

Model Number	Fig #	Lgth L	Glass G	Metal T
KGB-050-T-L1	2	4-7/8	1	.030
KGB-050-T-L2	2	9-7/8	6	.030
KGB-050-F1-L1	2	5	1	-
KGB-050-F1-L2	2	10	6	-
KGB-050-K1-L1	2	5	1	-
KGB-050-K1-L2	2	10	6	-
KGB-050-K2-L1	2	5	1	-
KGB-050-K2-L2	2	10	6	-
KGB-075-T-L1	2	4-7/8	1	.030
KGB-075-T-L2	2	9-7/8	6	.030
KGB-075-F1-L1	2	5	1	-
KGB-075-F1-L2	2	10	6	-
KGB-075-K1-L1	2	5	1	-
KGB-075-K1-L2	2	10	6	-
KGB-075-K2-L1	2	5	1	-
KGB-075-K2-L2	2	10	6	-
KGB-075-K4-L1	2	5	1	-
KGB-075-K4-L2	2	10	6	-
KGB-100-T-L1	2	4-7/8	1	.030
KGB-100-T-L2	2	9-7/8	6	.030
KGB-100-F2-L1	2	5	1	-
KGB-100-F2-L2	2	10	6	-
KGB-100-K2-L1	2	5	1	-
KGB-100-K2-L2	2	10	6	-
KGB-100-K4-L1	2	5	1	-
KGB-100-K4-L2	2	10	6	-
KGB-100-K5-L1	2	5	1	-
KGB-100-K5-L2	2	10	6	-

304 SS-to-7740 PYREX-to-304 SS[4]

Model Number	Fig #	Lgth L	Glass G	Metal T
SPS-050-T-L1	1	4-1/4	1	.035
SPS-050-T-L2	1	9-1/4	6	.035
SPS-050-F1-L1	1	4-3/8	1	-
SPS-050-F1-L2	1	9-3/8	6	-
SPS-050-K1-L1	1	4-3/8	1	-
SPS-050-K1-L2	1	9-3/8	6	-
SPS-050-K2-L1	1	4-3/8	1	-
SPS-050-K2-L2	1	9-3/8	6	-
SPS-075-T-L1	1	4-1/4	1	.035
SPS-075-T-L2	1	9-1/4	6	.035
SPS-075-F1-L1	1	4-3/8	1	-
SPS-075-F1-L2	1	9-3/8	6	-
SPS-075-K1-L1	1	4-3/8	1	-
SPS-075-K1-L2	1	9-3/8	6	-
SPS-075-K2-L1	1	4-3/8	1	-
SPS-075-K2-L2	1	9-3/8	6	-
SPS-075-K4-L1	1	4-3/8	1	-
SPS-075-K4-L2	1	9-3/8	6	-
SPS-100-T-L1	1	4-1/4	1	.035
SPS-100-T-L2	1	9-1/4	6	.035
SPS-100-F2-L1	1	4-3/8	1	-
SPS-100-F2-L2	1	9-3/8	6	-
SPS-100-K2-L1	1	4-3/8	1	-
SPS-100-K2-L2	1	9-3/8	6	-
SPS-100-K4-L1	1	4-3/8	1	-
SPS-100-K4-L2	1	9-3/8	6	-
SPS-100-K5-L1	1	4-3/8	1	-
SPS-100-K5-L2	1	9-3/8	6	-

Continued from previous page

LARSON
ELECTRONIC GLASS

Double Ended Glass Adaptors

Fig. 1

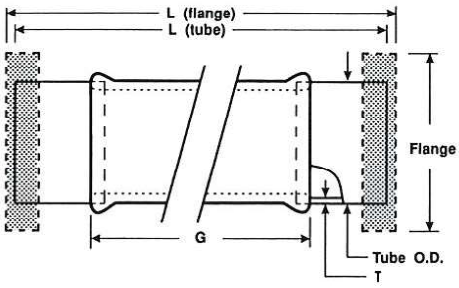

Fig. 2

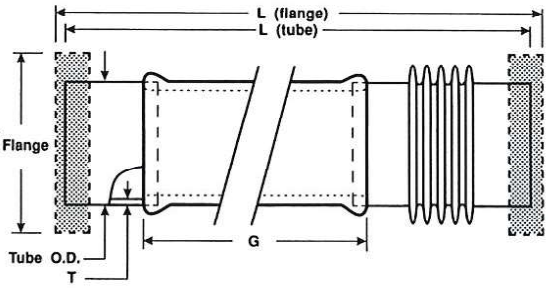

Notes:

1. Dimensions are in inches except where noted.
2. Overall lengths (L) and Glass lengths (G) are nominal ± 1/8 inch.
3. End of SS .065 wall (T) tubular-seals are thinned to .030 for welding.
4. 304 SS-to-PYREX (Tube and CF Flange models) bakeable to 450°C.

Kovar-to-7052 Glass-to-Kovar

Nom Size	Glass Nom ID	Description Both Ends	Ref	Flange OD	ISO No.	Model Number	Fig #	Lgth L	Glass G	Metal T
1-1/2"	• 1-5/16	1-1/2" O.D. Tube	T-L1	-	-	**KGK-150-T-L1**	1	2-7/8	1	.030
	• 1-5/16	1-1/2" O.D. Tube	T-L2	-	-	**KGK-150-T-L2**	1	7-7/8	6	.030
	• 1-5/16	CF 2-3/4" Flange	F2-L1	2.73	-	**KGK-150-F2-L1**	1	3	1	-
	• 1-5/16	CF 2-3/4" Flange	F2-L2	2.73	-	**KGK-150-F2-L2**	1	8	6	-
	• 1-5/16	CF 3-3/8" Flange	F3-L1	3.37	-	**KGK-150-F3-L1**	1	3	1	-
	• 1-5/16	CF 3-3/8" Flange	F3-L2	3.37	-	**KGK-150-F3-L2**	1	8	6	-
	• 1-5/16	*Kwik-Flange* K150	K4-L1	2.16	NW40	**KGK-150-K4-L1**	1	3	1	-
	• 1-5/16	*Kwik-Flange* K150	K4-L2	2.16	NW40	**KGK-150-K4-L2**	1	8	6	-
	• 1-5/16	*Kwik-Flange* K200	K5-L1	2.95	NW50	**KGK-150-K5-L1**	1	3	1	-
	• 1-5/16	*Kwik-Flange* K200	K5-L2	2.95	NW50	**KGK-150-K5-L2**	1	8	6	-
2"	• 1-13/16	2" O.D. Tube	T-L1	-	-	**KGK-200-T-L1**	1	3-3/8	1	.040
	• 1-13/16	2" O.D. Tube	T-L2	-	-	**KGK-200-T-L2**	1	8-3/8	6	.040
	• 1-13/16	CF 3-3/8" Flange	F3-L1	3.37	-	**KGK-200-F3-L1**	1	3-1/2	1	-
	• 1-13/16	CF 3-3/8" Flange	F3-L2	3.37	-	**KGK-200-F3-L2**	1	8-1/2	6	-
	• 1-13/16	CF 4-1/2" Flange	F4-L1	4.47	-	**KGK-200-F4-L1**	1	3-1/2	1	-
	• 1-13/16	CF 4-1/2" Flange	F4-L2	4.47	-	**KGK-200-F4-L2**	1	8-1/2	6	-
	• 1-13/16	*Kwik-Flange* K200	K5-L1	2.95	NW50	**KGK-200-K5-L1**	1	3-1/2	1	-
	• 1-13/16	*Kwik-Flange* K200	K5-L2	2.95	NW50	**KGK-200-K5-L2**	1	8-1/2	6	-
	• 1-13/16	*Large-Flange* L250	L6-L1	3.74	NW63	**KGK-200-L6-L1**	1	3-1/2	1	-
	• 1-13/16	*Large-Flange* L250	L6-L2	3.74	NW63	**KGK-200-L6-L2**	1	8-1/2	6	-
2-1/2"	• 2-3/16	2-1/2" O.D. Tube	T-L1	-	-	**KGK-250-T-L1**	1	4-3/8	1-3/4	.040
	• 2-3/16	2-1/2" O.D. Tube	T-L2	-	-	**KGK-250-T-L2**	1	9-3/8	6-3/4	.040
	• 2-3/16	CF 4-1/2" Flange	F4-L1	4.47	-	**KGK-250-F4-L1**	1	4-1/2	1-3/4	-
	• 2-3/16	CF 4-1/2" Flange	F4-L2	4.47	-	**KGK-250-F4-L2**	1	9-1/2	6-3/4	-
	• 2-3/16	*Large-Flange* L250	L6-L1	3.74	NW63	**KGK-250-L6-L1**	1	4-1/2	1-3/4	-
	• 2-3/16	*Large-Flange* L250	L6-L2	3.74	NW63	**KGK-250-L6-L2**	1	9-1/2	6-3/4	-
	• 2-3/16	*Large-Flange* L300	L8-L1	4.33	NW80	**KGK-250-L8-L1**	1	4-1/2	1-3/4	-
	• 2-3/16	*Large-Flange* L300	L8-L2	4.35	NW80	**KGK-250-L8-L2**	1	9-1/2	6-3/4	-

See Custom Design information on pages 6-9.

KGK-150-T-L1 KGK-250-T-L1 KGK-150-F2-L1 KGK-200-K5-L1 KGB-150-F3-L1

Kovar-to-7052 Glass-to-Bellows

Bellows 1" Flex Lgth., .006 Thick

Model Number	Fig #	Lgth L	Glass G	Metal T
KGB-150-T-L1	2	4-7/8	1	.030
KGB-150-T-L2	2	9-7/8	6	.030
KGB-150-F2-L1 (a)	2	5	1	-
KGB-150-F2-L2 (a)	2	10	6	-
KGB-150-F3-L1	2	5	1	-
KGB-150-F3-L2	2	10	6	-
KGB-150-K4-L1	2	5	1	-
KGB-150-K4-L2	2	10	6	-
KGB-150-K5-L1	2	5	1	-
KGB-150-K5-L2	2	10	6	-
KGB-200-T-L1	2	5-1/8	1	.040
KGB-200-T-L2	2	10-1/8	6	.040
KGB-200-F3-L1 (b)	2	5-1/4	1	-
KGB-200-F3-L2 (b)	2	10-1/4	6	-
KGB-200-F4-L1	2	5-1/4	1	-
KGB-200-F4-L2	2	10-1/4	6	-
KGB-200-K5-L1	2	5-1/4	1	-
KGB-200-K5-L2	2	10-1/4	6	-
KGB-200-L6-L1	2	5-1/4	1	-
KGB-200-L6-L2	2	10-1/4	6	-
KGB-250-T-L1	2	5-1/8	1	.040
KGB-250-T-L2	2	10-1/8	6	.040
KGB-250-F4-L1 (c)	2	5-1/4	1	-
KGB-250-F4-L2 (c)	2	10-1/4	6	-
KGB-250-L6-L1	2	5-1/4	1	-
KGB-250-L6-L2	2	10-1/4	6	-
KGB-250-L8-L1	2	5-1/4	1	-
KGB-250-L8-L2	2	10-1/4	6	-

304 SS-to-7740 PYREX-to-304 SS[4]

Model Number	Fig #	Lgth L	Glass G	Metal T[3]
SPS-150-T-L1	1	4-1/4	1	.065
SPS-150-T-L2	1	9-1/4	6	.065
SPS-150-F2-L1	1	4-3/8	1	-
SPS-150-F2-L2	1	9-3/8	6	-
SPS-150-F3-L1	1	4-3/8	1	-
SPS-150-F3-L2	1	9-3/8	6	-
SPS-150-K4-L1	1	4-3/8	1	-
SPS-150-K4-L2	1	9-3/8	6	-
SPS-150-K5-L1	1	4-3/8	1	-
SPS-150-K5-L2	1	9-3/8	6	-
SPS-200-T-L1	1	5	1	.065
SPS-200-T-L2	1	10	6	.065
SPS-200-F3-L1	1	5-1/8	1	-
SPS-200-F3-L2	1	10-1/8	6	-
SPS-200-F4-L1	1	5-1/8	1	-
SPS-200-F4-L2	1	10-1/8	6	-
SPS-200-K5-L1	1	5-1/8	1	-
SPS-200-K5-L2	1	10-1/8	6	-
SPS-200-L6-L1	1	5-1/8	1	-
SPS-200-L6-L2	1	10-1/8	6	-
SPS-250-T-L1	1	5	1	.065
SPS-250-T-L2	1	10	6	.065
SPS-250-F4-L1	1	5-1/8	1	-
SPS-250-F4-L2	1	10-1/8	6	-
SPS-250-L6-L1	1	5-1/8	1	-
SPS-250-L6-L2	1	10-1/8	6	-
SPS-250-L8-L1	1	5-1/8	1	-
SPS-250-L8-L2	1	10-1/8	6	-

(a) Nom 1-1/4 I.D. Bellows (b) Nom 1-1/2 I.D. Bellows (c) Nom 2-1/4 I.D. Bellows

LARSON
ELECTRONIC GLASS

Double Ended Glass Adaptors

Fig. 1

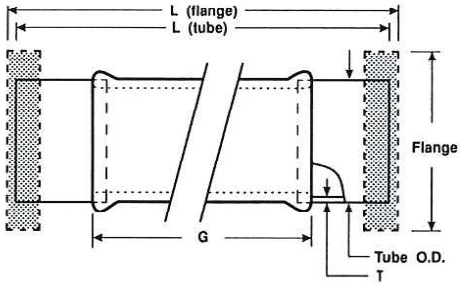

Fig. 2

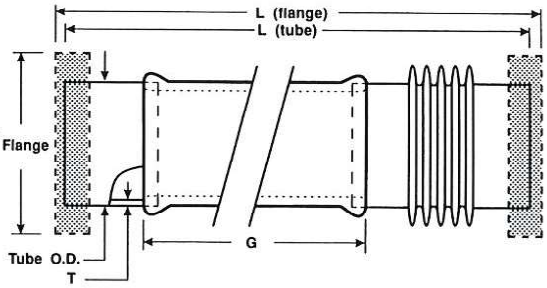

Notes:

1. Dimensions are in inches except where noted.
2. Overall lengths (L) and Glass lengths (G) are nominal ± 1/8 inch.
3. End of SS .065 wall (T) tubular-seals are thinned to .030 for welding.
4. 304 SS-to-PYREX (Tube and CF Flange models) bakeable to 450°C.

Kovar-to-7052 Glass-to-Kovar

Nom Size	Glass Nom ID	Description Both Ends	Ref	Flange OD	ISO No.	Model Number	Fig #	Lgth L	Glass G	Metal T
3"	• 2-11/16	3" O.D. Tube	T-L1	-	-	KGK-300-T-L1	1	4-3/8	2	.040
	• 2-11/16	3" O.D. Tube	T-L2	-	-	KGK-300-T-L2	1	9-3/8	7	.040
	• 2-11/16	CF 4-5/8" Flange	F5-L1	4.62	-	KGK-300-F5-L1	1	4-1/2	2	-
	• 2-11/16	CF 4-5/8" Flange	F5-L2	4.62	-	KGK-300-F5-L2	1	9-1/2	7	-
	• 2-11/16	CF 6" Flange	F6-L1	5.97	-	KGK-300-F6-L1	1	4-1/2	2	-
	• 2-11/16	CF 6" Flange	F6-L2	5.97	-	KGK-300-F6-L2	1	9-1/2	7	-
	• 2-11/16	*Large-Flange* L300	L8-L1	4.33	NW80	KGK-300-L8-L1	1	4-1/2	2	-
	• 2-11/16	*Large-Flange* L300	L8-L2	4.33	NW80	KGK-300-L8-L2	1	9-1/2	7	-
	• 2-11/16	*Large-Flange* L400	L10-L1	5.12	NW100	KGK-300-L10-L1	1	4-1/2	2	-
	• 2-11/16	*Large-Flange* L400	L10-L2	5.12	NW100	KGK-300-L10-L2	1	9-1/2	7	-
4"	• 3-11/16	4" O.D. Tube	T-L1	-	-	KGK-400-T-L1	1	4-3/8	1	.030
	• 3-11/16	4" O.D. Tube	T-L2	-	-	KGK-400-T-L2	1	9-3/8	6	.030
	• 3-11/16	CF 6" Flange	F6-L1	5.97	-	KGK-400-F6-L1	1	4-1/2	1	-
	• 3-11/16	CF 6" Flange	F6-L2	5.97	-	KGK-400-F6-L2	1	9-1/2	6	-
	• 3-11/16	*Large-Flange* L400	L10-L1	5.12	NW100	KGK-400-L10-L1	1	4-1/2	1	-
	• 3-11/16	*Large-Flange* L400	L10-L2	5.12	NW100	KGK-400-L10-L2	1	9-1/2	6	-
	• 3-11/16	*Large-Flange* L600	L16-L1	7.09	NW160	KGK-400-L16-L1	1	4-1/2	1	-
	• 3-11/16	*Large-Flange* L600	L16-L2	7.09	NW160	KGK-400-L16-L2	1	9-1/2	6	-
5"	• 4-1/2	5" O.D.Tube	T-L1	-	-	KGK-500-T-L1	1	4-3/8	1	.040
	• 4-1/2	5" O.D.Tube	T-L2	-	-	KGK-500-T-L2	1	9-3/8	6	.040
	• 4-1/2	CF 6-3/4" Flange	F7-L1	6.75	-	KGK-500-F7-L1	1	4-1/2	1	-
	• 4-1/2	CF 6-3/4" Flange	F7-L2	6.75	-	KGK-500-F7-L2	1	9-1/2	6	-
	• 4-1/2	*Large-Flange* L600	L16-L1	7.09	NW160	KGK-500-L16-L1	1	4-1/2	1	-
	• 4-1/2	*Large-Flange* L600	L16-L2	7.09	NW160	KGK-500-L16-L2	1	9-1/2	6	-
	• 4-1/2	*Large-Flange* L800	L20-L1	9.45	NW200	KGK-500-L20-L1	1	4-1/2	1	-
	• 4-1/2	*Large-Flange* L800	L20-L2	9.45	NW200	KGK-500-L20-L2	1	9-1/2	6	-
6"	• 5-1/2	6" O.D. Tube	T-L1	-	-	KGK-600-T-L1	1	4-3/8	1	.040
	• 5-1/2	6" O.D. Tube	T-L2	-	-	KGK-600-T-L2	1	9-3/8	6	.040
	• 5-1/2	CF 8" Flange	F8-L1	7.97	-	KGK-600-F8-L1	1	4-1/2	1	-
	• 5-1/2	CF 8" Flange	F8-L2	7.97	-	KGK-600-F8-L2	1	9-1/2	6	-
	• 5-1/2	*Large-Flange* L600	L16-L1	7.09	NW160	KGK-600-L16-L1	1	4-1/2	1	-
	• 5-1/2	*Large-Flange* L600	L16-L2	7.09	NW160	KGK-600-L16-L2	1	9-1/2	6	-
	• 5-1/2	*Large-Flange* L800	L20-L1	9.45	NW200	KGK-600-L20-L1	1	4-1/2	1	-
	• 5-1/2	*Large-Flange* L800	L20-L2	9.45	NW200	KGK-600-L20-L2	1	9-1/2	6	-

See Custom Design information on pages 6-9.

Kovar-to-7052 Glass-to-Bellows
Bellows 1" Flex Lgth., .008 Thick

Model Number	Fig #	Lgth L	Glass G	Metal T
KGB-300-T-L1	2	5-1/8	1	.040
KGB-300-T-L2	2	10-1/8	6	.040
KGB-300-F5-L1 (a)	2	5-1/4	1	-
KGB-300-F5-L2 (a)	2	10-1/4	6	-
KGB-300-F6-L1	2	5-1/4	1	-
KGB-300-F6-L2	2	10-1/4	6	-
KGB-300-L8-L1	2	5-1/4	1	-
KGB-300-L8-L2	2	10-1/4	6	-
KGB-300-L10-L1	2	5-1/4	1	-
KGB-300-L10-L2	2	10-1/4	6	-
-				
-				
-				
-				
-				
-				
-				
-				

304 SS-to-7740 PYREX-to-304 SS[4]

Model Number	Fig #	Lgth L	Glass G	Metal T[3]
SPS-300-T-L1	1	5	1	.065
SPS-300-T-L2	1	10	6	.065
SPS-300-F5-L1	1	5-1/8	1	-
SPS-300-F5-L2	1	10-1/8	6	-
SPS-300-F6-L1	1	5-1/8	1	-
SPS-300-F6-L2	1	10-1/8	6	-
SPS-300-L8-L1	1	5-1/8	1	-
SPS-300-L8-L2	1	10-1/8	6	-
SPS-300-L10-L1	1	5-1/8	1	-
SPS-300-L10-L2	1	10-1/8	6	-
SPS-400-T-L1	1	5	1	.065
SPS-400-T-L2	1	10	6	.065
SPS-400-F6-L1	1	5-1/8	1	-
SPS-400-F6-L2	1	10-1/8	6	-
SPS-400-L10-L1	1	5-1/8	1	-
SPS-400-L10-L2	1	10-1/8	6	-
SPS-400-L16-L1	1	5-1/8	1	-
SPS-400-L16-L2	1	10-1/8	6	-

(a) Nom 2-1/2 I.D. Bellows, .006 thick.

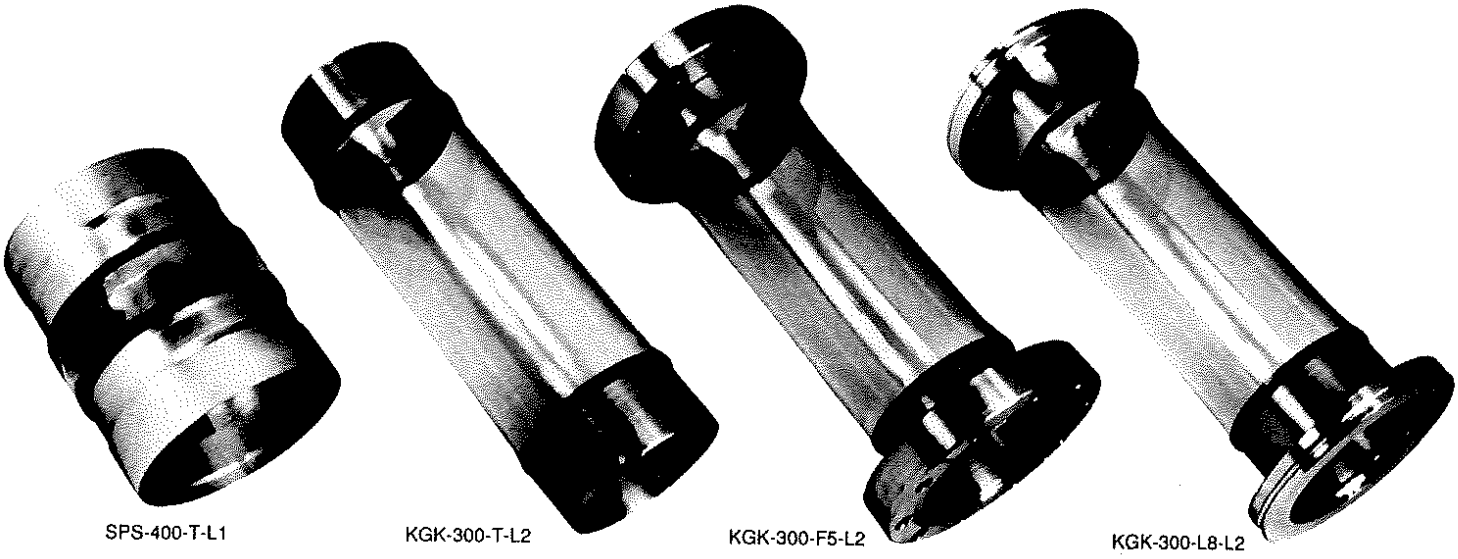

SPS-400-T-L1 KGK-300-T-L2 KGK-300-F5-L2 KGK-300-L8-L2

Continued from previous page

LARSON
ELECTRONIC GLASS

Closed End "Domed" Glass Adaptors

FEATURES

- 10 standard sizes from 1/2 thru 6 inch
- Other non-standard sizes available
- Choice of materials:
  - Kovar-to-7052 Glass
  - 304 SS-to-7740 PYREX
  - 304 SS-to-Quartz
  - Special Glass available
- Choice of glass length:
  - Standard length (L1)
  - Long Length (L2)
  - Custom Lengths
- Choice of SS metal-end vacuum seal:
  - Tubular Seal
  - CF Type Flange
  - ISO *Kwik-Flange*
  - ISO *Large-Flange*
  - Custom Flange
- CF Type Flange repeat bakeout cycles to 450°C[5]
- CF Type Flange vacuum range to below 10^{-11} torr.
- ISO flange intermittent bakeout cycles to 200°C[6]
- ISO flange vacuum range to 10^{-9} torr.

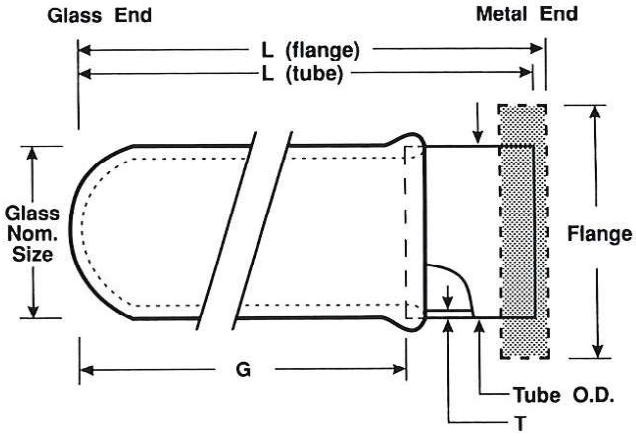

Notes:

1. Dimensions are in inches except where noted.
2. Overall lengths (L) and Glass lengths (G) are nominal ± 1/8 inch.
3. End of SS .065 wall (T) tubular-seals are thinned to .030 for welding.
4. (G) section of L1 std. lgth. models includes approx. 4" of Quartz; (G) section of L2 long lgth. is approx. 8" Quartz. Remainder is graded seal.
5. Kovar-to-7052 Glass (Tube and CF Flange models) bakeable to 400°C.
6. Repeat bakeout cycles will require periodic replacement of O-rings.

Kovar-to-7052 Glass[5]

Nom Size	Glass Nom ID	Metal-End	Ref	Flange OD	ISO No.	Model Number	Lgth L	Glass G	Metal T
1/2"	• 5/16	1/2" O.D. Tube	T-L1	-	-	KGD-050-T-L1	5-7/8	4-3/4	.030
	• 5/16	1/2" O.D. Tube	T-L2	-	-	KGD-050-T-L2	9-7/8	8-3/4	.030
	• 5/16	CF 1-1/3" Flange	F1-L1	1.33	-	KGD-050-F1-L1	6	4-3/4	-
	• 5/16	CF 1-1/3" Flange	F1-L2	1.33	-	KGD-050-F1-L2	10	8-3/4	-
	• 5/16	*Kwik-Flange* K075	K1-L1	1.18	NW16	KGD-050-K1-L1	6	4-3/4	-
	• 5/16	*Kwik-Flange* K075	K1-L2	1.18	NW16	KGD-050-K1-L2	10	8-3/4	-
	• 5/16	*Kwik-Flange* K100	K2-L1	1.57	NW25	KGD-050-K2-L1	6	4-3/4	-
	• 5/16	*Kwik-Flange* K100	K2-L2	1.57	NW25	KGD-050-K2-L2	10	8-3/4	-
3/4"	• 9/16	3/4" O.D. Tube	T-L1	-	-	KGD-075-T-L1	5-7/8	4-3/4	.030
	• 9/16	3/4" O.D. Tube	T-L2	-	-	KGD-075-T-L2	9-7/8	8-3/4	.030
	• 9/16	CF 1-1/3" Flange	F1-L1	1.33	-	KGD-075-F1-L1	6	4-3/4	-
	• 9/16	CF 1-1/3" Flange	F1-L2	1.33	-	KGD-075-F1-L2	10	8-3/4	-
	• 9/16	*Kwik-Flange* K075	K1-L1	1.18	NW16	KGD-075-K1-L1	6	4-3/4	-
	• 9/16	*Kwik-Flange* K075	K1-L2	1.18	NW16	KGD-075-K1-L2	10	8-3/4	-
	• 9/16	*Kwik-Flange* K100	K2-L1	1.57	NW25	KGD-075-K2-L1	6	4-3/4	-
	• 9/16	*Kwik-Flange* K100	K2-L2	1.57	NW25	KGD-075-K2-L2	10	8-3/4	-
	• 9/16	*Kwik-Flange* K150	K4-L1	2.16	NW40	KGD-075-K4-L1	6	4-3/4	-
	• 9/16	*Kwik-Flange* K150	K4-L2	2.16	NW40	KGD-075-K4-L2	10	8-3/4	-
1"	• 13/16	1" O.D. Tube	T-L1	-	-	KGD-100-T-L1	5-7/8	4-3/4	.030
	• 13/16	1" O.D. Tube	T-L2	-	-	KGD-100-T-L2	9-7/8	8-3/4	.030
	• 13/16	CF 2-3/4" Flange	F2-L1	2.73	-	KGD-100-F2-L1	6	4-3/4	-
	• 13/16	CF 2-3/4" Flange	F2-L2	2.73	-	KGD-100-F2-L2	10	8-3/4	-
	• 13/16	*Kwik-Flange* K100	K2-L1	1.57	NW25	KGD-100-K2-L1	6	4-3/4	-
	• 13/16	*Kwik-Flange* K100	K2-L2	1.57	NW25	KGD-100-K2-L2	10	8-3/4	-
	• 13/16	*Kwik-Flange* K150	K4-L1	2.16	NW40	KGD-100-K4-L1	6	4-3/4	-
	• 13/16	*Kwik-Flange* K150	K4-L2	2.16	NW40	KGD-100-K4-L2	10	8-3/4	-
	• 13/16	*Kwik-Flange* K200	K5-L1	2.95	NW50	KGD-100-K5-L1	6	4-3/4	-
	• 13/16	*Kwik-Flange* K200	K5-L2	2.95	NW50	KGD-100-K5-L2	10	8-3/4	-

See Custom Design information on pages 6-9.

SPD-100-T-L1

KGD-075-F1-L1

SPD-100-K2-L1

304 Stainless Steel-to-7740 PYREX

Model Number	Lgth L	Glass G	Metal T
SPD-050-T-L1	6-1/2	4-3/4	.035
SPD-050-T-L2	10-1/2	8-3/4	.035
SPD-050-F1-L1	6-5/8	4-3/4	-
SPD-050-F1-L2	10-5/8	8-3/4	-
SPD-050-K1-L1	6-5/8	4-3/4	-
SPD-050-K1-L2	10-5/8	8-3/4	-
SPD-050-K2-L1	6-5/8	4-3/4	-
SPD-050-K2-L2	10-5/8	8-3/4	-
SPD-075-T-L1	6-1/2	4-3/4	.035
SPD-075-T-L2	10-1/2	8-3/4	.035
SPD-075-F1-L1	6-5/8	4-3/4	-
SPD-075-F1-L2	10-5/8	8-3/4	-
SPD-075-K1-L1	6-5/8	4-3/4	-
SPD-075-K1-L2	10-5/8	8-3/4	-
SPD-075-K2-L1	6-5/8	4-3/4	-
SPD-075-K2-L2	10-5/8	8-3/4	-
SPD-075-K4-L1	6-5/8	4-3/4	-
SPD-075-K4-L2	10-5/8	8-3/4	-
SPD-100-T-L1	6-1/2	4-3/4	.035
SPD-100-T-L2	10-1/2	8-3/4	.035
SPD-100-F2-L1	6-5/8	4-3/4	-
SPD-100-F2-L2	10-5/8	8-3/4	-
SPD-100-K2-L1	6-5/8	4-3/4	-
SPD-100-K2-L2	10-5/8	8-3/4	-
SPD-100-K4-L1	6-5/8	4-3/4	-
SPD-100-K4-L2	10-5/8	8-3/4	-
SPD-100-K5-L1	6-5/8	4-3/4	-
SPD-100-K5-L2	10-5/8	8-3/4	-

Continued from previous page

LARSON
ELECTRONIC GLASS

Closed End "Domed" Glass Adaptors

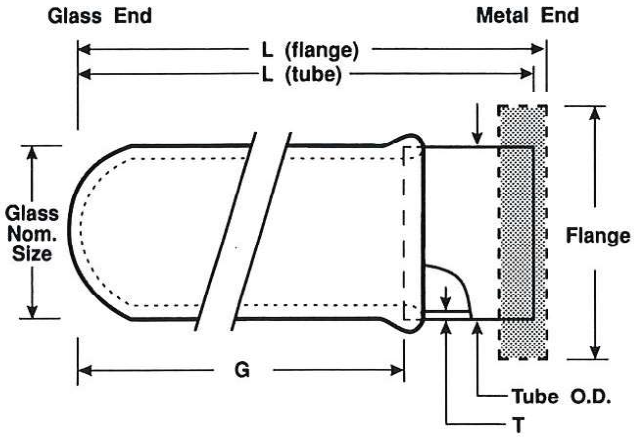

Notes:

1. Dimensions are in inches except where noted.
2. Overall lengths (L) and Glass lengths (G) are nominal ± 1/8 inch.
3. End of SS .065 wall (T) tubular-seals are thinned to .030 for welding.
4. (G) section of L1 std. lgth. models includes approx. 4" of Quartz; (G) section of L2 long lgth. is approx. 8" Quartz. Remainder is graded seal.
5. Kovar-to-7052 Glass (Tube and CF Flange models) bakeable to 400°C.

4

Nom Size	Glass Nom ID	Metal-End	Ref	Flange OD	ISO No.	Kovar-to-7052 Glass(5) Model Number	Lgth L	Glass G	Metal T
1-1/2"	• 1-5/16	1-1/2" O.D. Tube	T-L1	-	-	KGD-150-T-L1	5-7/8	4-3/4	.030
	• 1-5/16	1-1/2" O.D. Tube	T-L2	-	-	KGD-150-T-L2	9-7/8	8-3/4	.030
	• 1-5/16	CF 2-3/4" Flange	F2-L1	2.73	-	KGD-150-F2-L1	6	4-3/4	-
	• 1-5/16	CF 2-3/4" Flange	F2-L2	2.73	-	KGD-150-F2-L2	10	8-3/4	-
	• 1-5/16	CF 3-3/8" Flange	F3-L1	3.37	-	KGD-150-F3-L1	6	4-3/4	-
	• 1-5/16	CF 3-3/8" Flange	F3-L2	3.37	-	KGD-150-F3-L2	10	8-3/4	-
	• 1-5/16	*Kwik-Flange* K150	K4-L1	2.16	NW40	KGD-150-K4-L1	6	4-3/4	-
	• 1-5/16	*Kwik-Flange* K150	K4-L2	2.16	NW40	KGD-150-K4-L2	10	8-3/4	-
	• 1-5/16	*Kwik-Flange* K200	K5-L1	2.95	NW50	KGD-150-K5-L1	6	4-3/4	-
	• 1-5/16	*Kwik-Flange* K200	K5-L2	2.95	NW50	KGD-150-K5-L2	10	8-3/4	-
2"	• 1-13/16	2" O.D. Tube	T-L1	-	-	KGD-200-T-L1	5-7/8	4-1/4	.040
	• 1-13/16	2" O.D. Tube	T-L2	-	-	KGD-200-T-L2	9-7/8	8-1/4	.040
	• 1-13/16	CF 3-3/8" Flange	F3-L1	3.37	-	KGD-200-F3-L1	6	4-1/4	-
	• 1-13/16	CF 3-3/8" Flange	F3-L2	3.37	-	KGD-200-F3-L2	10	8-1/4	-
	• 1-13/16	CF 4-1/2" Flange	F4-L1	4.47	-	KGD-200-F4-L1	6	4-1/4	-
	• 1-13/16	CF 4-1/2" Flange	F4-L2	4.47	-	KGD-200-F4-L2	10	8-1/4	-
	• 1-13/16	*Kwik-Flange* K200	K5-L1	2.95	NW50	KGD-200-K5-L1	6	4-1/4	-
	• 1-13/16	*Kwik-Flange* K200	K5-L2	2.95	NW50	KGD-200-K5-L2	10	8-1/4	-
	• 1-13/16	*Large-Flange* L250	L6-L1	3.74	NW63	KGD-200-L6-L1	6	4-1/4	-
	• 1-13/16	*Large-Flange* L250	L6-L2	3.74	NW63	KGD-200-L6-L2	10	8-1/4	-
2-1/2"	• 2-3/16	2-1/2" O.D. Tube	T-L1	-	-	KGD-250-T-L1	5-7/8	4-1/4	.040
	• 2-3/16	2-1/2" O.D. Tube	T-L2	-	-	KGD-250-T-L2	9-7/8	8-1/4	.040
	• 2-3/16	CF 4-1/2" Flange	F4-L1	4.47	-	KGD-250-F4-L1	6	4-1/4	-
	• 2-3/16	CF 4-1/2" Flange	F4-L2	4.47	-	KGD-250-F4-L2	10	8-1/4	-
	• 2-3/16	*Large-Flange* L250	L6-L1	3.74	NW63	KGD-250-L6-L1	6	4-1/4	-
	• 2-3/16	*Large-Flange* L250	L6-L2	3.74	NW63	KGD-250-L6-L2	10	8-1/4	-
	• 2-3/16	*Large-Flange* L300	L8-L1	4.33	NW80	KGD-250-L8-L1	6	4-1/4	-
	• 2-3/16	*Large-Flange* L300	L8-L2	4.33	NW80	KGD-250-L8-L2	10	8-1/4	-

See Custom Design information on pages 6-9.

SPD-150-T-L1

KGD-150-F2-L1

SPD-200-L6-L1

304 Stainless Steel-to-7740 PYREX

Model Number	Lgth L	Glass G	Metal T[3]
SPD-150-T-L1	6-1/2	4-3/4	.065
SPD-150-T-L2	10-1/2	8-3/4	.065
SPD-150-F2-L1	6-5/8	4-3/4	-
SPD-150-F2-L2	10-5/8	8-3/4	-
SPD-150-F3-L1	6-5/8	4-3/4	-
SPD-150-F3-L2	10-5/8	8-3/4	-
SPD-150-K4-L1	6-5/8	4-3/4	-
SPD-150-K4-L2	10-5/8	8-3/4	-
SPD-150-K5-L1	6-5/8	4-3/4	-
SPD-150-K5-L2	10-5/8	8-3/4	-
SPD-200-T-L1	6-1/2	4-1/4	.065
SPD-200-T-L2	10-1/2	8-1/4	.065
SPD-200-F3-L1	6-5/8	4-1/4	-
SPD-200-F3-L2	10-5/8	8-1/4	-
SPD-200-F4-L1	6-5/8	4-1/4	-
SPD-200-F4-L2	10-5/8	8-1/4	-
SPD-200-K5-L1	6-5/8	4-1/4	-
SPD-200-K5-L2	10-5/8	8-1/4	-
SPD-200-L6-L1	6-5/8	4-1/4	-
SPD-200-L6-L2	10-5/8	8-1/4	-
SPD-250-T-L1	6-1/2	4-1/4	.065
SPD-250-T-L2	10-1/2	8-1/4	.065
SPD-250-F4-L1	6-5/8	4-1/4	-
SPD-250-F4-L2	10-5/8	8-1/4	-
SPD-250-L6-L1	6-5/8	4-1/4	-
SPD-250-L6-L2	10-5/8	8-1/4	-
SPD-250-L8-L1	6-5/8	4-1/4	-
SPD-250-L8-L2	10-5/8	8-1/4	-

Continued from previous page

LARSON
ELECTRONIC GLASS

Closed End "Domed" Glass Adaptors

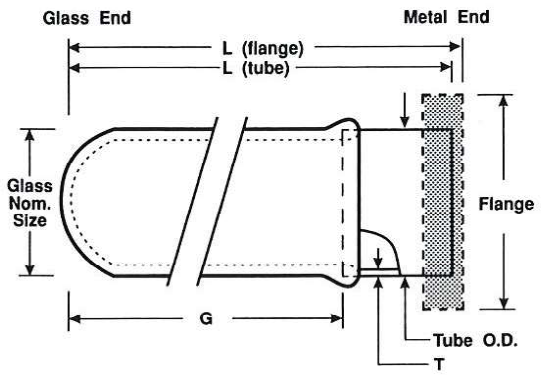

Notes:

1. Dimensions are in inches except where noted.
2. Overall lengths (L) and Glass lengths (G) are nominal ± 1/8 inch.
3. End of SS .065 wall (T) tubular-seals are thinned to .030 for welding.
4. (G) section of L1 std. lgth. models includes approx. 4" of Quartz; (G) section of L2 long lgth. is approx. 8" Quartz. Remainder is graded seal.
5. Kovar-to-7052 Glass (Tube and CF Flange models) bakeable to 400°C.

Kovar-to-7052 Glass[5]

Nom Size	Glass Nom ID	Metal-End	Ref	Flange OD	ISO No.	Model Number	Lgth L	Glass G	Metal T
3"	• 2-11/16	3" O.D. Tube	T-L1	-	-	**KGD-300-T-L1**	5-7/8	4-1/4	.040
	• 2-11/16	3" O.D. Tube	T-L2	-	-	**KGD-300-T-L2**	9-7/8	8-1/4	.040
	• 2-11/16	CF 4-5/8" Flange	F5-L1	4.62	-	**KGD-300-F5-L1**	6	4-1/4	-
	• 2-11/16	CF 4-5/8" Flange	F5-L1	4.62	-	**KGD-300-F5-L2**	10	8-1/4	-
	• 2-11/16	CF 6" Flange	F6-L1	5.97	-	**KGD-300-F6-L1**	6	4-1/4	-
	• 2-11/16	CF 6" Flange	F6-L2	5.97	-	**KGD-300-F6-L2**	10	8-1/4	-
	• 2-11/16	*Large-Flange* L300	L8-L1	4.33	NW80	**KGD-300-L8-L1**	6	4-1/4	-
	• 2-11/16	*Large-Flange* L300	L8-L2	4.33	NW80	**KGD-300-L8-L2**	10	8-1/4	-
	• 2-11/16	*Large-Flange* L400	L10-L1	5.12	NW100	**KGD-300-L10-L1**	6	4-1/4	-
	• 2-11/16	*Large-Flange* L400	L10-L2	5.12	NW100	**KGD-300-L10-L2**	10	8-1/4	-
4"	• 3-11/16	4" O.D. Tube	T-L1	-	-	**KGD-400-T-L1**	5-7/8	3-7/8	.030
	• 3-11/16	4" O.D. Tube	T-L2	-	-	**KGD-400-T-L2**	9-7/8	7-7/8	.030
	• 3-11/16	CF 6" Flange	F6-L1	5.97	-	**KGD-400-F6-L1**	6	3-7/8	-
	• 3-11/16	CF 6" Flange	F6-L2	5.97	-	**KGD-400-F6-L2**	10	7-7/8	-
	• 3-11/16	*Large-Flange* L400	L10-L1	5.12	NW100	**KGD-400-L10-L1**	6	3-7/8	-
	• 3-11/16	*Large-Flange* L400	L10-L2	5.12	NW100	**KGD-400-L10-L2**	10	7-7/8	-
	• 3-11/16	*Large-Flange* L600	L16-L1	7.09	NW160	**KGD-400-L16-L1**	6	3-7/8	-
	• 3-11/16	*Large-Flange* L600	L16-L2	7.09	NW160	**KGD-400-L16-L2**	10	7-7/8	-
5"	• 4-1/2	5" O.D. Tube	T-L1	-	-	**KGD-500-T-L1**	5-7/8	3-7/8	.040
	• 4-1/2	5" O.D. Tube	T-L2	-	-	**KGD-500-T-L2**	9-7/8	7-7/8	.040
	• 4-1/2	CF 6-3/4" Flange	F7-L1	6.75	-	**KGD-500-F7-L1**	6	3-7/8	-
	• 4-1/2	CF 6-3/4" Flange	F7-L2	6.75	-	**KGD-500-F7-L2**	10	7-7/8	-
	• 4-1/2	*Large-Flange* L600	L16-L1	7.09	NW160	**KGD-500-L16-L1**	6	3-7/8	-
	• 4-1/2	*Large-Flange* L600	L16-L2	7.09	NW160	**KGD-500-L16-L2**	10	7-7/8	-
	• 4-1/2	*Large-Flange* L800	L20-L1	9.45	NW200	**KGD-500-L20-L1**	6	3-7/8	-
	• 4-1/2	*Large-Flange* L800	L20-L2	9.45	NW200	**KGD-500-L20-L2**	10	7-7/8	-
6"	• 5-1/2	6" O.D. Tube	T-L1	-	-	**KGD-600-T-L1**	5-7/8	3-7/8	.040
	• 5-1/2	6" O.D. Tube	T-L2	-	-	**KGD-600-T-L2**	9-7/8	7-7/8	.040
	• 5-1/2	CF 8" Flange	F8-L1	7.97	-	**KGD-600-F8-L1**	6	3-7/8	-
	• 5-1/2	CF 8" Flange	F8-L2	7.97	-	**KGD-600-F8-L2**	10	7-7/8	-
	• 5-1/2	*Large-Flange* L600	L16-L1	7.09	NW160	**KGD-600-L16-L1**	6	3-7/8	-
	• 5-1/2	*Large-Flange* L600	L16-L2	7.09	NW160	**KGD-600-L16-L2**	10	7-7/8	-
	• 5-1/2	*Large-Flange* L800	L20-L1	9.45	NW200	**KGD-600-L20-L1**	6	3-7/8	-
	• 5-1/2	*Large-Flange* L800	L20-L2	9.45	NW200	**KGD-600-L20-L2**	10	7-7/8	-

See Custom Design information on pages 6-9.

304 Stainless Steel-to-7740 PYREX

Model Number	Lgth L	Glass G	Metal T[3]
SPD-300-T-L1	6-1/2	4-1/4	.065
SPD-300-T-L2	10-1/2	8-1/4	.065
SPD-300-F5-L1	6-5/8	4-1/4	-
SPD-300-F5-L2	10-5/8	8-1/4	-
SPD-300-F6-L1	6-5/8	4-1/4	-
SPD-300-F6-L2	10-5/8	8-1/4	-
SPD-300-L8-L1	6-5/8	4-1/4	-
SPD-300-L8-L2	10-5/8	8-1/4	-
SPD-300-L10-L1	6-5/8	4-1/4	-
SPD-300-L10-L2	10-5/8	8-1/4	-
SPD-400-T-L1	6-1/2	4-1/4	.065
SPD-400-T-L2	10-1/2	8-1/4	.065
SPD-400-F6-L1	6-5/8	4-1/4	-
SPD-400-F6-L2	10-5/8	8-1/4	-
SPD-400-L10-L1	6-5/8	4-1/4	-
SPD-400-L10-L2	10-5/8	8-1/4	-
SPD-400-L16-L1	6-5/8	4-1/4	-
SPD-400-L16-L2	10-5/8	8-1/4	-

SPD-300-T-L2

KGD-400-F6-L1

KGD-400-L10-L1

Continued from previous page

LARSON
ELECTRONIC GLASS

Stainless Steel Bellows-to-Glass Adaptors

FEATURES

- 9 standard sizes from 1/4 thru 3 inch
- Other non-standard sizes available
- Choice of configurations:
  - Type 321 SS-to-7740 PYREX at one end and standard cuff, heavy cuff or flange at other end
  - Type 321 SS-to-7740 PYREX at both ends
- Choice of two Flex Lengths (F) in each size
- Custom Flex Lengths available
- *Quartz and special glass available*
- Choice of flanges:
  - CF Type Flanges
  - ISO *Kwik-Flange*
  - ISO *Large-Flange*
  - Custom Flanges
- CF Type Flange repeat bakeout cycles to 450°C
- CF Type Flange vacuum range to below 10^{-11} torr.
- ISO flange intermittent bakeout cycles to 200°C[4]
- ISO flange vacuum range to 10^{-9} torr.

Fig. 1

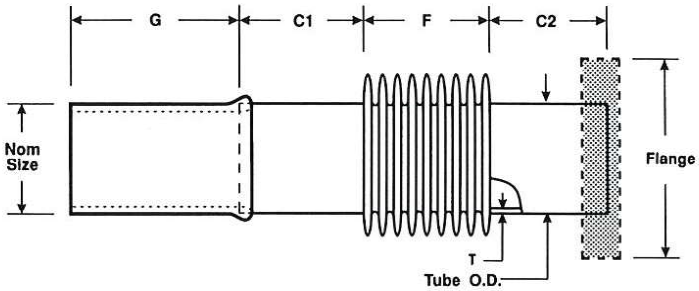

Fig. 2

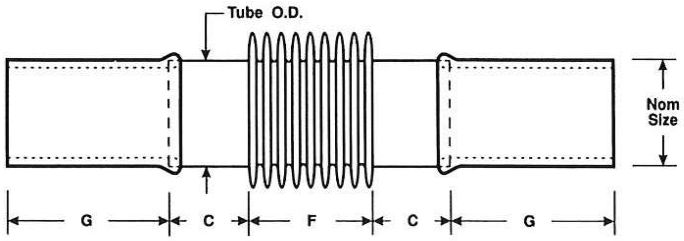

Notes:

1. Dimensions are in inches except where noted.
2. Glass (G) and Cuff (C) lengths are nominal ± 1/8 inch.
3. Flex lengths (F) are nominal and subject to compression and extension.
4. Repeat bakeout cycles will require periodic replacement of O-rings.

SS Bellows-to-7740 PYREX (one end) Standard Cuff

Glass End Nom Size	Metal-End	Ref	Flange OD	ISO No.	Max Bend	Model Number	Fig #	Flex F	Cuffs C[1&2]	Glass G	Metal T
1/4"	• 1/4" O.D. Tube	T-L2	-	-	180°	**BP1-025-ST-L2**	1	2	3/4	3	.006
	• 1/4" O.D. Tube	T-L4	-	-	360°	**BP1-025-ST-L4**	1	4	3/4	3	.006
	• CF 1-1/3" Flange	F1-L2	1.33	-	180°	**BP1-025-F1-L2**	1	2	3/4	3	.006
	• CF 1-1/3" Flange	F1-L4	1.33	-	360°	**BP1-025-F1-L4**	1	4	3/4	3	.006
	• *Kwik-Flange* K075	K1-L2	1.18	NW16	180°	**BP1-025-K1-L2**	1	2	3/4	3	.006
	• *Kwik-Flange* K075	K1-L4	1.18	NW16	360°	**BP1-025-K1-L4**	1	4	3/4	3	.006
	• *Kwik-Flange* K100	K2-L2	1.57	NW25	180°	**BP1-025-K2-L2**	1	2	3/4	3	.006
	• *Kwik-Flange* K100	K2-L4	1.57	NW25	360°	**BP1-025-K2-L4**	1	4	3/4	3	.006
3/8"	• 3/8" O.D. Tube	T-L1	-	-	90°	**BP1-037-ST-L1**	1	1	3/4	3	.006
	• 3/8" O.D. Tube	T-L3	-	-	225°	**BP1-037-ST-L3**	1	3	3/4	3	.006
	• CF 1-1/3" Flange	F1-L1	1.33	-	90°	**BP1-037-F1-L1**	1	1	3/4	3	.006
	• CF 1-1/3" Flange	F1-L3	1.33	-	225°	**BP1-037-F1-L3**	1	3	3/4	3	.006
	• *Kwik-Flange* K075	K1-L1	1.18	NW16	90°	**BP1-037-K1-L1**	1	1	3/4	3	.006
	• *Kwik-Flange* K075	K1-L3	1.18	NW16	225°	**BP1-037-K1-L3**	1	3	3/4	3	.006
	• *Kwik-Flange* K100	K2-L1	1.57	NW25	90°	**BP1-037-K2-L1**	1	1	3/4	3	.006
	• *Kwik-Flange* K100	K2-L3	1.57	NW25	225°	**BP1-037-K2-L3**	1	3	3/4	3	.006
1/2"	• 1/2" O.D. Tube	T-L1	-	-	45°	**BP1-050-ST-L1**	1	1	1	3	.006
	• 1/2" O.D. Tube	T-L3	-	-	180°	**BP1-050-ST-L3**	1	3	1	3	.006
	• CF 1-1/3" Flange	F1-L1	1.33	-	45°	**BP1-050-F1-L1**	1	1	1	3	.006
	• CF 1-1/3" Flange	F1-L3	1.33	-	180°	**BP1-050-F1-L3**	1	3	1	3	.006
	• *Kwik-Flange* K075	K1-L1	1.18	NW16	45°	**BP1-050-K1-L1**	1	1	1	3	.006
	• *Kwik-Flange* K075	K1-L3	1.18	NW16	180°	**BP1-050-K1-L3**	1	3	1	3	.006
	• *Kwik-Flange* K100	K2-L1	1.57	NW25	45°	**BP1-050-K2-L1**	1	1	1	3	.006
	• *Kwik-Flange* K100	K2-L3	1.57	NW25	180°	**BP1-050-K2-L3**	1	3	1	3	.006

See Custom Design information on pages 6-9.

BP1-025-HT-L2 BP1-050-F1-L1 BP1-050-K1-L1 BP2-037-L1

SS Bellows-to-7740 PYREX (one end) Heavy Cuff

Model Number	Fig #	Flex F	Cuffs C^1 - C^2	Glass G	Metal T
BP1-025-HT-L2	1	2	3/4 - 3/4	3	.035
BP1-025-HT-L4	1	4	3/4 - 3/4	3	.035
-					
-					
-					
-					
-					
-					
BP1-037-HT-L1	1	1	3/4 - 3/4	3	.035
BP1-037-HT-L3	1	3	3/4 - 3/4	3	.035
-					
-					
-					
-					
-					
-					
BP1-050-HT-L1	1	1	1 - 3/4	3	.035
BP1-050-HT-L3	1	3	1 - 3/4	3	.035
-					
-					
-					
-					
-					
-					

SS Bellows-to-7740 PYREX (both ends)

Model Number	Fig #	Flex F	Cuff C	Glass G
BP2-025-L2	2	2	3/4	3
BP2-025-L4	2	4	3/4	3
-				
-				
-				
-				
-				
-				
BP2-037-L1	2	1	3/4	3
BP2-037-L3	2	3	3/4	3
-				
-				
-				
-				
-				
-				
BP2-050-L1	2	1	1	3
BP2-050-L3	2	3	1	3
-				
-				
-				
-				
-				
-				

Continued from previous page

LARSON
ELECTRONIC GLASS

Stainless Steel Bellows-to-Glass Adaptors

Fig. 1

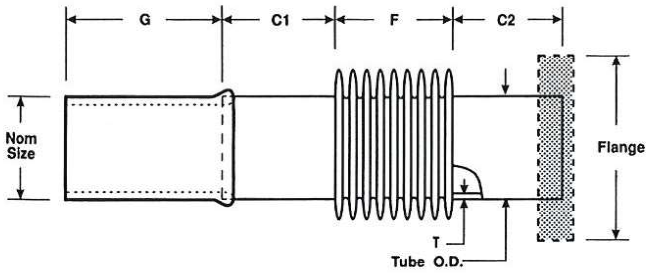

Fig. 2

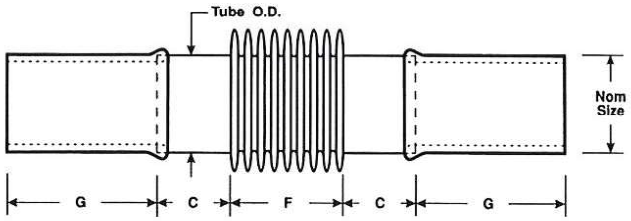

Notes:

1. Dimensions are in inches except where noted.
2. Glass (G) and Cuff (C) lengths are nominal ± 1/8 inch.
3. Flex lengths (F) are nominal and subject to compression and extension.

Glass End Nom Size	Metal-End	Ref	Flange OD	ISO No.	Max Bend	SS Bellows-to-7740 PYREX (one end) Standard Cuff: Model Number	Fig #	Flex F	Cuffs C1&2	Glass G	Metal T
3/4"	• 3/4" O.D. Tube	T-L1	-	-	30°	**BP1-075-ST-L1**	1	1	1	3	.006
	• 3/4" O.D. Tube	T-L3	-	-	90°	**BP1-075-ST-L3**	1	3	1	3	.006
	• CF 1-1/3" Flange	F1-L1	1.33	-	30°	**BP1-075-F1-L1** (a)	1	1	1	3	.006
	• CF 1-1/3" Flange	F1-L3	1.33	-	90°	**BP1-075-F1-L3** (a)	1	3	1	3	.006
	• CF 2-3/4" Flange	F2-L1	2.73	-	30°	**BP1-075-F2-L1**	1	1	1	3	.006
	• CF 2-3/4" Flange	F2-L3	2.73	-	90°	**BP1-075-F2-L3**	1	3	1	3	.006
	• *Kwik-Flange* K075	K1-L1	1.18	NW16	30°	**BP1-075-K1-L1** (a)	1	1	1	3	.006
	• *Kwik-Flange* K075	K1-L3	1.18	NW16	90°	**BP1-075-K1-L3** (a)	1	3	1	3	.006
	• *Kwik-Flange* K100	K2-L1	1.57	NW25	30°	**BP1-075-K2-L1**	1	1	1	3	.006
	• *Kwik-Flange* K100	K2-L3	1.57	NW25	90°	**BP1-075-K2-L3**	1	3	1	3	.006
	• *Kwik-Flange* K150	K4-L1	2.16	NW40	30°	**BP1-075-K4-L1**	1	1	1	3	.006
	• *Kwik-Flange* K150	K4-L3	2.16	NW40	90°	**BP1-075-K4-L3**	1	3	1	3	.006
1"	• 1" O.D. Tube	T-L1	-	-	20°	**BP1-100-ST-L1**	1	1	1	3	.006
	• 1" O.D. Tube	T-L3	-	-	90°	**BP1-100-ST-L3**	1	3	1	3	.006
	• CF 2-3/4" Flange	F2-L1	2.73	-	20°	**BP1-100-F2-L1**	1	1	1	3	.006
	• CF 2-3/4" Flange	F2-L3	2.73	-	90°	**BP1-100-F2-L3**	1	3	1	3	.006
	• *Kwik-Flange* K100	K2-L1	1.57	NW25	20°	**BP1-100-K2-L1**	1	1	1	3	.006
	• *Kwik-Flange* K100	K2-L3	1.57	NW25	90°	**BP1-100-K2-L3**	1	3	1	3	.006
	• *Kwik-Flange* K150	K4-L1	2.16	NW40	20°	**BP1-100-K4-L1**	1	1	1	3	.006
	• *Kwik-Flange* K150	K4-L3	2.16	NW40	90°	**BP1-100-K4-L3**	1	3	1	3	.006
	• *Kwik-Flange* K200	K5-L1	2.95	NW50	20°	**BP1-100-K5-L1**	1	1	1	3	.006
	• *Kwik-Flange* K200	K5-L3	2.95	NW50	90°	**BP1-100-K5-L3**	1	3	1	3	.006

(a) Nom 5/8 I.D. Bellows

See Custom Design information on pages 6-9.

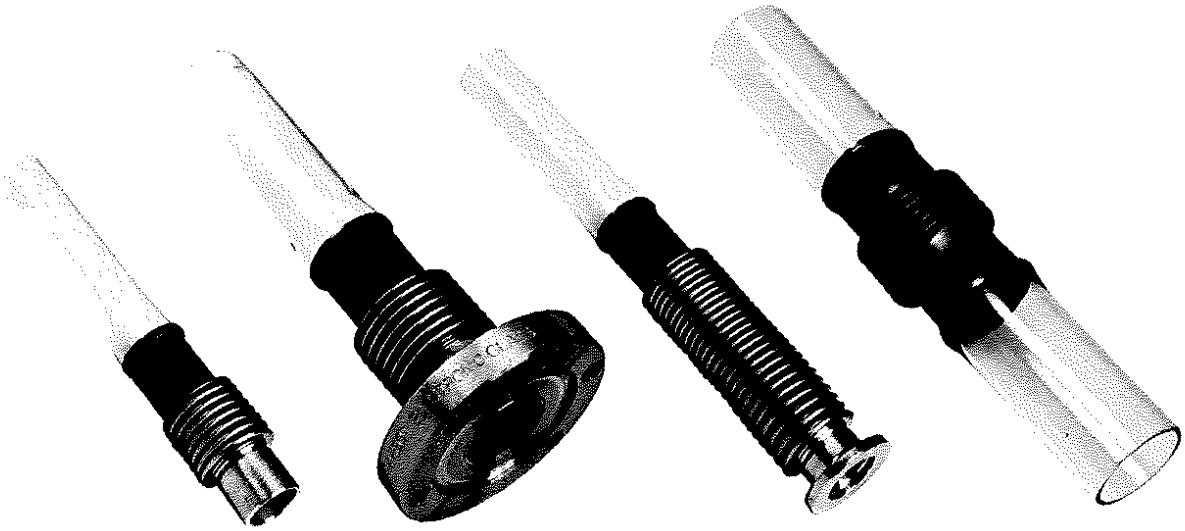

BP1-075-HT-L1 BP1-100-F2-L1 BP1-075-K1-L3 BP2-100-L1

SS Bellows-to-7740 PYREX (one end) Heavy Cuff

Model Number	Fig #	Flex F	Cuffs C^1 - C^2	Glass G	Metal T
BP1-075-HT-L1	1	1	1 - 3/4	3	.049
BP1-075-HT-L3	1	3	1 - 3/4	3	.049
-					
-					
-					
-					
-					
-					
-					
-					
-					
-					
BP1-100-HT-L1	1	1	1 - 3/4	3	.065
BP1-100-HT-L3	1	3	1 - 3/4	3	.065
-					
-					
-					
-					
-					
-					
-					
-					

SS Bellows-to-7740 PYREX (both ends)

Model Number	Fig #	Flex F	Cuff C	Glass G
BP2-075-L1	2	1	1	3
BP2-075-L3	2	3	1	3
-				
-				
-				
-				
-				
-				
-				
-				
-				
-				
BP2-100-L1	2	1	1	3
BP2-100-L3	2	3	1	3
-				
-				
-				
-				
-				
-				
-				
-				

Continued from previous page

LARSON
ELECTRONIC GLASS

Stainless Steel Bellows-to-Glass Adaptors

Fig. 1

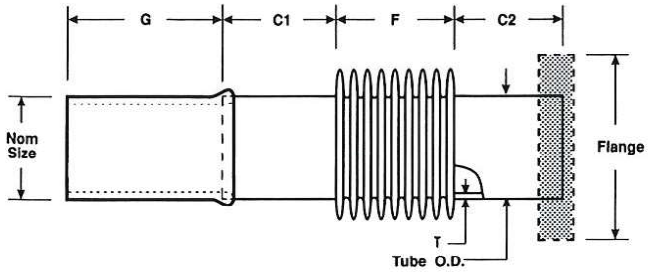

Fig. 2

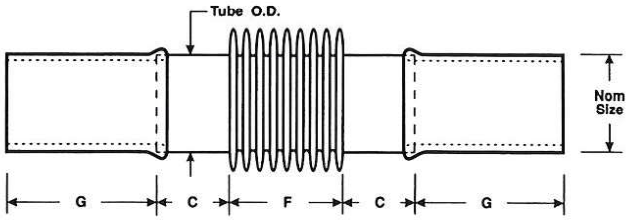

Notes:

1. Dimensions are in inches except where noted.
2. Glass (G) and Cuff (C) lengths are nominal ± 1/8 inch.
3. Flex lengths (F) are nominal and subject to compression and extension.

Glass End Nom Size	Metal-End	Ref	Flange OD	ISO No.	Max Bend	SS Bellows-to-7740 PYREX (one end) Standard Cuff: Model Number	Fig #	Flex F	Cuffs C1&2	Glass G	Metal T
1-1/2"	• 1-1/2" O.D. Tube	T-L1	-	-	15°	**BP1-150-ST-L1**	1	1	1	3	.006
	• 1-1/2" O.D. Tube	T-L3	-	-	60°	**BP1-150-ST-L3**	1	3	1	3	.006
	• CF 2-3/4" Flange	F2-L1	2.73	-	15°	**BP1-150-F2-L1** (a)	1	1	1	3	.006
	• CF 2-3/4" Flange	F2-L3	2.73	-	60°	**BP1-150-F2-L3** (a)	1	3	1	3	.006
	• CF 3-3/8" Flange	F3-L1	3.37	-	15°	**BP1-150-F3-L1**	1	1	1	3	.006
	• CF 3-3/8" Flange	F3-L3	3.37	-	60°	**BP1-150-F3-L3**	1	3	1	3	.006
	• *Kwik-Flange* K150	K4-L1	2.16	NW40	15°	**BP1-150-K4-L1**	1	1	1	3	.006
	• *Kwik-Flange* K150	K4-L3	2.16	NW40	60°	**BP1-150-K4-L3**	1	3	1	3	.006
	• *Kwik-Flange* K200	K5-L1	2.95	NW50	15°	**BP1-150-K5-L1**	1	1	1	3	.006
	• *Kwik-Flange* K200	K5-L3	2.95	NW50	60°	**BP1-150-K5-L3**	1	3	1	3	.006
2"	• 2" O.D. Tube	T-L1	-	-	10°	**BP1-200-ST-L1**	1	1	1	3	.006
	• 2" O.D. Tube	T-L3	-	-	30°	**BP1-200-ST-L3**	1	3	1	3	.006
	• CF 4-1/2" Flange	F4-L1	4.47	-	10°	**BP1-200-F4-L1**	1	1	1	3	.006
	• CF 4-1/2" Flange	F4-L3	4.47	-	30°	**BP1-200-F4-L3**	1	3	1	3	.006
	• *Kwik-Flange* K200	K5-L1	2.95	NW50	10°	**BP1-200-K5-L1**	1	1	1	3	.006
	• *Kwik-Flange* K200	K5-L3	2.95	NW50	30°	**BP1-200-K5-L3**	1	3	1	3	.006
	• *Large-Flange* L250	L6-L1	3.74	NW63	10°	**BP1-200-L6-L1**	1	1	1	3	.006
	• *Large-Flange* L250	L6-L3	3.74	NW63	30°	**BP1-200-L6-L3**	1	3	1	3	.006

(a) Nom 1-1/4 I.D. Bellows

See Custom Design information on pages 6-9.

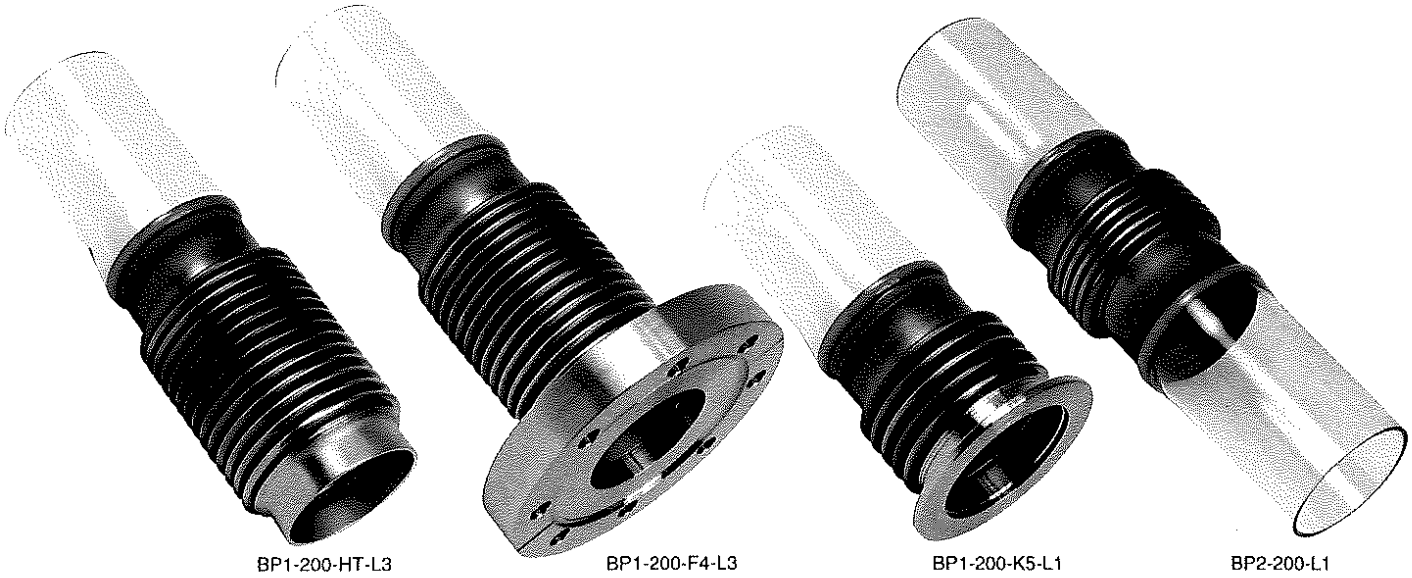

SS Bellows-to-7740 PYREX (one end) Heavy Cuff

Model Number	Fig #	Flex F	Cuffs C¹ - C²	Glass G	Metal T
BP1-150-HT-L1	1	1	1 - 3/4	3	.065
BP1-150-HT-L3	1	3	1 - 3/4	3	.065
-					
-					
-					
-					
-					
-					
-					
-					
BP1-200-HT-L1	1	1	1 - 3/4	3	.065
BP1-200-HT-L3	1	3	1 - 3/4	3	.065
-					
-					
-					
-					
-					
-					

SS Bellows-to-7740 PYREX (both ends)

Model Number	Fig #	Flex F	Cuff C	Glass G
BP2-150-L1	2	1	1	3
BP2-150-L3	2	3	1	3
-				
-				
-				
-				
-				
-				
-				
-				
BP2-200-L1	2	1	1	3
BP2-200-L3	2	3	1	3
-				
-				
-				
-				
-				
-				

Continued from previous page

LARSON
ELECTRONIC GLASS

Stainless Steel Bellows-to-Glass Adaptors

Fig. 1

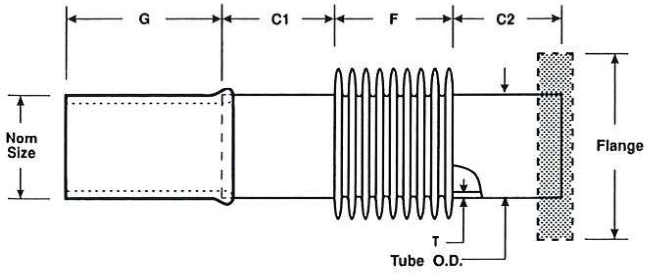

Fig. 2

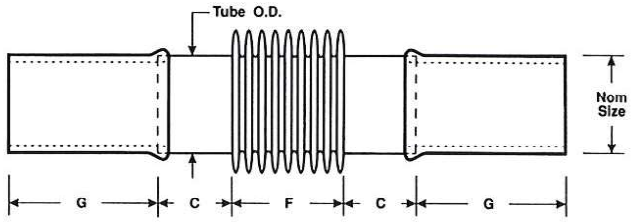

Notes:

1. Dimensions are in inches except where noted.
2. Glass (G) and Cuff (C) lengths are nominal ± 1/8 inch.
3. Flex lengths (F) are nominal and subject to compression and extension.

Glass End Nom Size	Metal-End	Ref	Flange OD	ISO No.	Max Bend	SS Bellows-to-7740 PYREX (one end) Standard Cuff Model Number	Fig #	Flex F	Cuffs C1&2	Glass G	Metal T
2-1/2"	• 2-1/2" O.D. Tube	T-L1	-	-	15°	**BP1-250-ST-L1**	1	1	1	3	.006
	• 2-1/2" O.D. Tube	T-L3	-	-	35°	**BP1-250-ST-L3**	1	3	1	3	.006
	• CF 4-1/2" Flange	F4-L1	4.47	-	15°	**BP1-250-F4-L1** (a)	1	1	1	3	.006
	• CF 4-1/2" Flange	F4-L3	4.47	-	35°	**BP1-250-F4-L3** (a)	1	3	1	3	.006
	• CF 4-5/8" Flange	F5-L1	4.62	-	15°	**BP1-250-F5-L1**	1	1	1	3	.006
	• CF 4-5/8" Flange	F5-L3	4.62	-	35°	**BP1-250-F5-L3**	1	3	1	3	.006
	• *Large-Flange* L250	L6-L1	3.74	NW63	15°	**BP1-250-L6-L1**	1	1	1	3	.006
	• *Large-Flange* L250	L6-L3	3.74	NW63	35°	**BP1-250-L6-L3**	1	3	1	3	.006
	• *Large-Flange* L300	L8-L1	4.43	NW80	15°	**BP1-250-L8-L1**	1	1	1	3	.006
	• *Large-Flange* L300	L8-L3	4.43	NW80	35°	**BP1-250-L8-L3**	1	3	1	3	.006
3"	• 3" O.D. Tube	T-L1	-	-	10°	**BP1-300-ST-L1**	1	1	1	4	.008
	• 3" O.D. Tube	T-L3	-	-	30°	**BP1-300-ST-L3**	1	3	1	4	.008
	• CF 6" Flange	F6-L1	5.97	-	10°	**BP1-300-F6-L1**	1	1	1	4	.008
	• CF 6" Flange	F6-L3	5.97	-	30°	**BP1-300-F6-L3**	1	3	1	4	.008
	• *Large-Flange* L300	L8-L1	4.43	NW80	10°	**BP1-300-L8-L1**	1	1	1	4	.008
	• *Large-Flange* L300	L8-L3	4.43	NW80	30°	**BP1-300-L8-L3**	1	3	1	4	.008
	• *Large-Flange* L400	L10-L1	5.12	NW100	10°	**BP1-300-L10-L1**	1	1	1	4	.008
	• *Large-Flange* L400	L10-L3	5.12	NW100	30°	**BP1-300-L10-L3**	1	3	1	4	.008

(a) Nom 2-1/4 I.D. Bellows

See Custom Design information on pages 6-9.

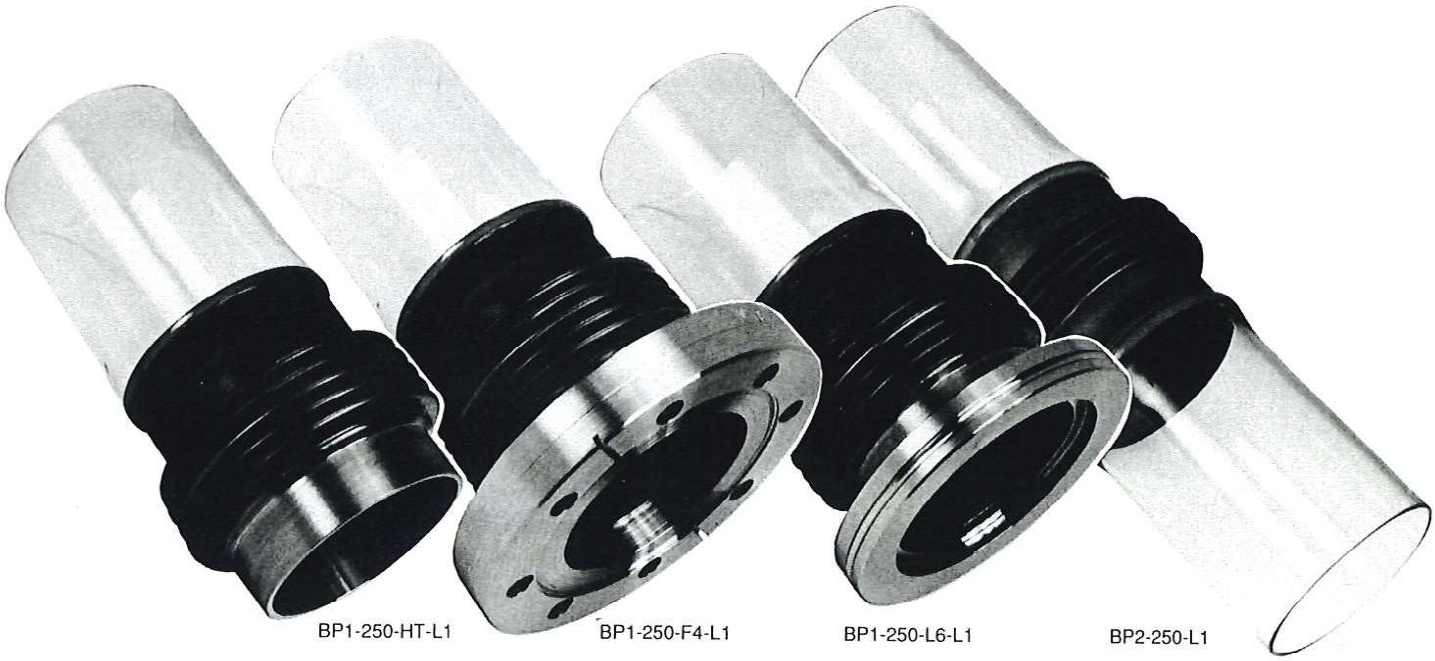

SS Bellows-to-7740 PYREX (one end) Heavy Cuff

Model Number	Fig #	Flex F	Cuffs C^1 - C^2	Glass G	Metal T
BP1-250-HT-L1	1	1	1 - 3/4	3	.065
BP1-250-HT-L3	1	3	1 - 3/4	3	.065
-					
-					
-					
-					
-					
-					
-					
-					
BP1-300-HT-L1	1	1	1 - 3/4	4	.065
BP1-300-HT-L3	1	3	1 - 3/4	4	.065
-					
-					
-					
-					
-					
-					

SS Bellows-to-7740 PYREX (both ends)

Model Number	Fig #	Flex F	Cuff C	Glass G
BP2-250-L1	2	1	1	3
BP2-250-L3	2	3	1	3
-				
-				
-				
-				
-				
-				
-				
-				
BP2-300-L1	2	1	1	4
BP2-300-L3	2	3	1	4
-				
-				
-				
-				
-				
-				

Continued from previous page

LARSON
ELECTRONIC GLASS

Stainless Steel Bellows & Flexible Couplings

FEATURES

- 23 standard sizes from 1/4 thru 6 inch
- Other non-standard sizes available

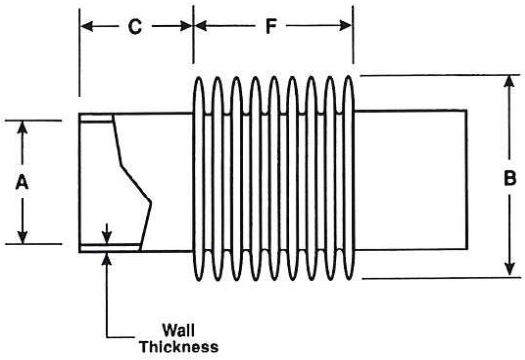

SB-075

SB-250

Notes:

1. Couplings are listed by mating tube size. Bellows I.D.'s are smaller.
2. Dimensions are in inches except where noted.

Type 321 Stainless Steel Bellows

Size	Model Number	Thickness Wall	I.D. A	Max O.D. B	Cuff C	Flex F	Deflection + or -
1/4"	SB-025	.005	.25	.37	.50	1.00	.25
5/16"	SB-031	.005	.31	.46	.50	1.00	.25
3/8"	SB-037	.005	.37	.57	.50	1.50	.38
1/2"	SB-050	.006	.50	.75	.50	1.50	.38
5/8"	SB-062	.006	.62	.87	.50	1.50	.38
3/4"	SB-075	.006	.75	1.04	.50	1.50	.50
7/8"	SB-087	.006	.87	1.25	.50	2.00	.50
1"	SB-100	.006	1.00	1.37	.75	2.00	.50
1-1/8"	SB-112	.006	1.12	1.46	.75	2.00	.50
1-1/4"	SB-125	.006	1.25	1.60	.75	2.00	.50
1-3/8"	SB-137	.006	1.37	1.81	.75	2.00	.50
1-1/2"	SB-150	.006	1.50	1.90	.75	2.00	.50
1-5/8"	SB-162	.006	1.62	2.05	.75	2.00	.50
1-3/4"	SB-175	.006	1.75	2.24	.75	2.00	.50
2"	SB-200	.006	2.00	2.43	.75	2.50	.75
2-1/4"	SB-225	.006	2.25	2.81	.75	2.50	.75
2-1/2"	SB-250	.006	2.50	2.98	.75	2.50	.75
3"	SB-300	.008	3.00	3.77	1.00	3.00	.75
3-1/2"	SB-350	.008	3.50	4.25	1.00	3.50	.75
4"	SB-400	.008	4.00	4.78	1.00	4.00	1.25
4-1/2"	SB-450	.008	4.50	5.28	1.00	4.00	1.25
5"	SB-500	.008	5.00	5.75	1.00	5.00	1.50
6"	SB-600	.010	6.00	6.85	1.25	5.00	1.50

FEATURES

- 8 standard sizes from 3/4 thru 6 inch
- Other non-standard sizes available
- Type 321 stainless steel bellows
- Choice of type 304 SS flanges:
  - CF Type Flanges — ISO *Large-Flange*
  - ISO *Kwik-Flange* — Custom Flanges
- CF Type Flange repeat bakeout cycles to 400°C
- CF Type Flange vacuum range to below 10^{-11} torr.
- ISO flange intermittent bakeout cycles to 200°C[3]
- ISO flange vacuum range to 10^{-9} torr.

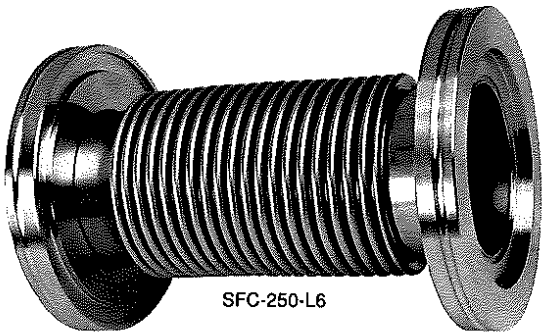
SFC-250-L6

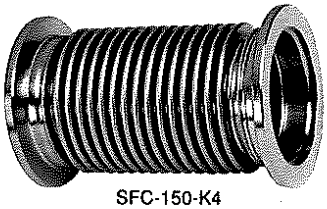
SFC-150-K4

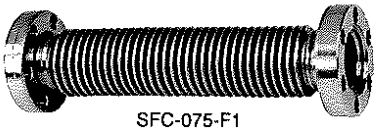
SFC-075-F1

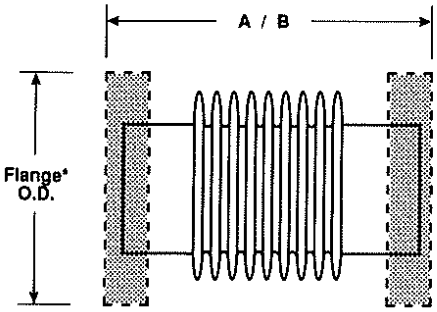

*C.F. Type (only) Rotatable at one end.

Notes:

1. Bellows sizes are listed by Inside Diameter of Cuff. Flex Length; I.D. is slightly smaller.
2. Dimensions are in inches except where noted.
3. Repeat bakeout cycles will require periodic replacement of O-rings.

Stainless Steel Flexible Couplings

Nom Size[1]	Vacuum Seal	Ref	Flange OD	ISO No.	Model Number	Bellows I.D.	Free A	Compressed B
3/4"	• CF Type 1-1/3" Flange	F1	1.33	-	**SFC-075-F1**	.67	4-1/2	3-3/4
	• *Kwik-Flange* K075	K1	1.18	NW16	**SFC-075-K1**	.67	4	3-1/8
1"	• CF Type 2-3/4" Flange	F2	2.73	-	**SFC-100-F2**	1.00	4	3-1/8
	• *Kwik-Flange* K100	K2	1.57	NW25	**SFC-100-K2**	1.00	4	3-1/8
1-1/2"	• CF Type 2-3/4" Flange	F2	2.73	-	**SFC-150-F2**	1.25	4	3-1/8
	• *Kwik-Flange* K150	K4	2.16	NW40	**SFC-150-K4**	1.25	4	3-1/8
2"	• CF Type 3-3/8" Flange	F3	3.37	-	**SFC-200-F3**	1.75	4	3-1/8
	• *Kwik-Flange* K200	K5	2.95	NW50	**SFC-200-K5**	1.75	4	3-1/8
2-1/2"	• CF Type 4-1/2" Flange	F4	4.47	-	**SFC-250-F4**	2.25	6	4-1/2
	• *Large-Flange* L250	L6	3.74	NW63	**SFC-250-L6**	2.25	6	4-1/2
3"	• CF Type 4-5/8" Flange	F5	4.62	-	**SFC-300-F5**	2.50	6	4-1/2
	• *Large-Flange* L300	L8	4.33	NW80	**SFC-300-L8**	2.50	6	4-1/2
4"	• CF Type 6" Flange	F6	5.97	-	**SFC-400-F6**	3.50	6	4-1/2
	• *Large-Flange* L400	L10	5.12	NW100	**SFC-400-L10**	3.50	6	4-1/2
6"	• CF Type 8" Flange	F8	7.97	-	**SFC-600-F8**	5.50	8	5-3/4
	• *Large-Flange* L600	L16	7.09	NW160	**SFC-600-L16**	5.50	8	5-3/4

LARSON
ELECTRONIC GLASS

Fiberoptic Feedthrus

FEATURES

- Choice of 1, 2, or 4 Light Ports
- Sapphire for broader transmission range[2]
- Glass mounted in 304 stainless steel
- Sapphire mounted in Kovar sleeve
- Choice of CF or ISO type vacuum flanges
- CF bakeable to 450°C without Light Guide Cables
- CF vacuum range to below 10^{-11} torr.
- ISO flange intermittent bakeout cycles to 200°C without Light Guide Cables[3]
- Nom 3/16" I.D. Light Guide Receptacles

SFOF-4P-F3

DESCRIPTION

Fiberoptic Feedthrus provide a means of channeling light signals in and out of high vacuum chambers. End tips of the Fiberoptic Light Guide Cables are inserted into both the air-side and the vacuum side receptacles of the feedthru. The end tips are held in close proximity to the vacuum window with set screws. The nominal 3/16" O.D. x 1/2" size is standard. 1/4" and other custom sizes are available on special order.

Notes:

1. Dimensions are in inches except where noted.
2. Refer to page 11 for transmission curves.
3. Repeat bakeout cycles will require periodic replacement of O-rings.

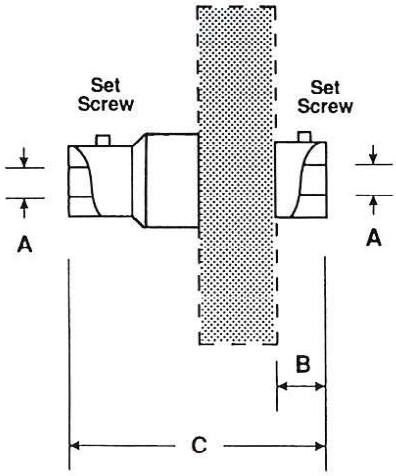

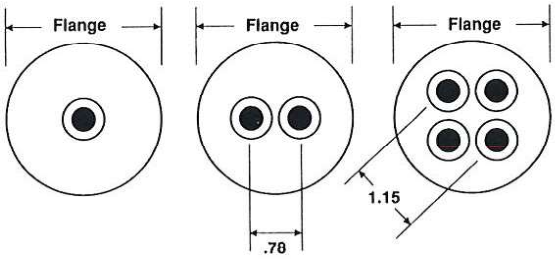

Sapphire Fiberoptic Feedthrus

Number of Light Ports	Nom Size	Mounting	Ref	Flange OD	ISO No.	Model Number	I.D. A	B	Overall C
1	• 3/16	CF 1-1/3" Flange	F1	1.33	-	**SFOF-1P-F1**	3/16	5/32	1-1/8
	• 3/16	CF 2-3/4" Flange	F2	2.73	-	**SFOF-1P-F2**	3/16	5/32	1-1/8
	• 3/16	*Kwik-Flange* K075	K1	1.18	NW16	**SFOF-1P-K1**	3/16	5/32	1-1/8
	• 3/16	*Kwik-Flange* K100	K2	1.57	NW25	**SFOF-1P-K2**	3/16	5/32	1-1/8
2	• 3/16	CF 2-3/4" Flange	F2	2.73	-	**SFOF-2P-F2**	3/16	5/32	1-1/8
	• 3/16	CF 3-3/8" Flange	F3	3.37	-	**SFOF-2P-F3**	3/16	5/32	1-1/8
	• 3/16	*Kwik-Flange* K150	K4	2.16	NW40	**SFOF-2P-K4**	3/16	5/32	1-1/8
	• 3/16	*Kwik-Flange* K200	K5	2.95	NW50	**SFOF-2P-K5**	3/16	5/32	1-1/8
4	• 3/16	CF 3-3/8" Flange	F3	3.37	-	**SFOF-4P-F3**	3/16	5/32	1-1/8
	• 3/16	CF 4-1/2" Flange	F4	4.47	-	**SFOF-4P-F4**	3/16	5/32	1-1/8
	• 3/16	*Kwik-Flange* K200	K5	2.95	NW50	**SFOF-4P-K5**	3/16	5/32	1-1/8

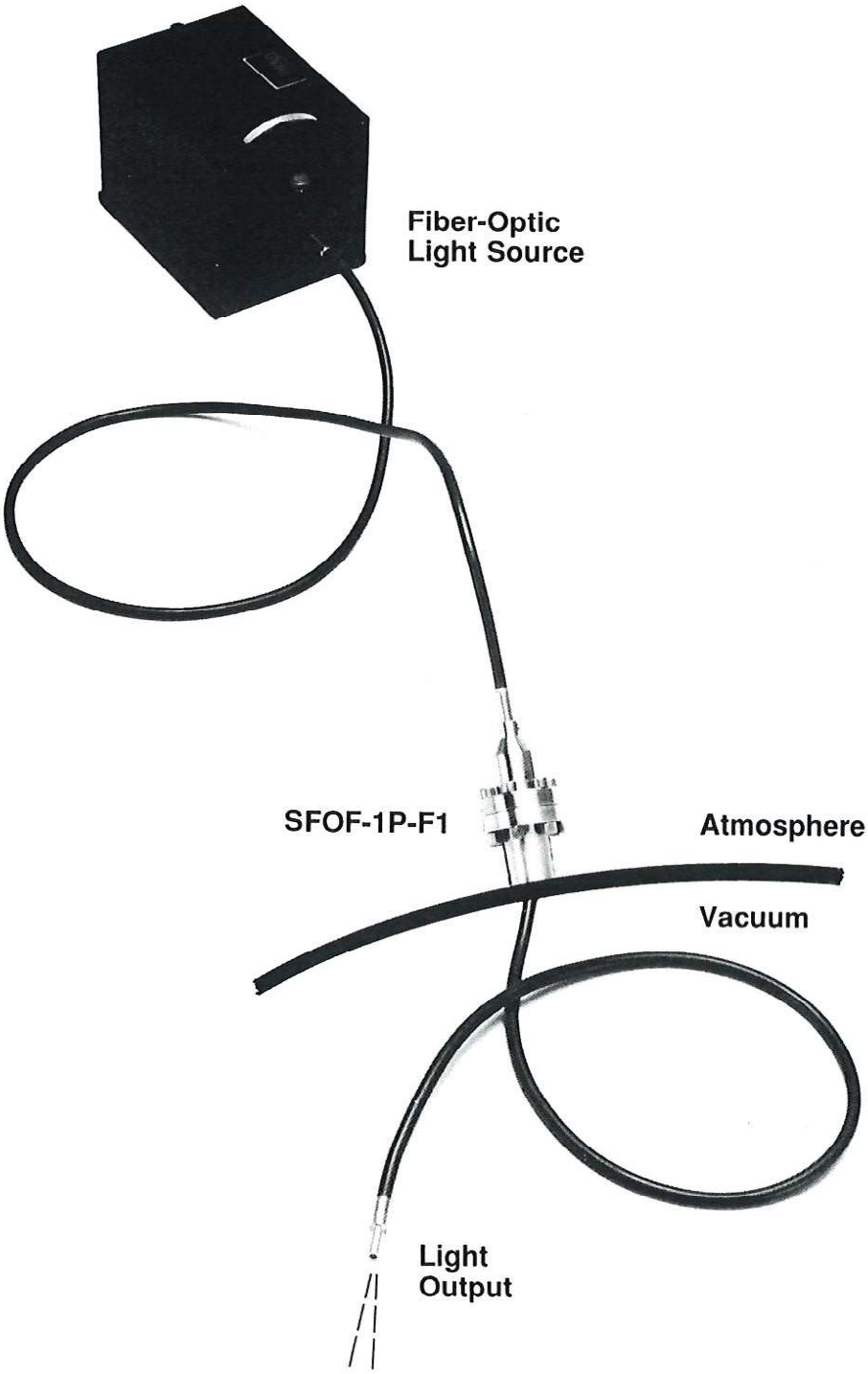

Continued from previous page

LARSON
ELECTRONIC GLASS

Electrical Feedthrus, Glass Sealed

FEATURES

- Glass insulation seal
- Choice of 2 thru 12 conductor pins
- Choice of Kovar metal-end vacuum seal:
  Tubular Seal, CF Type Flange, Custom Flange, ISO *Kwik-Flange*, ISO *Large-Flange*
- CF Type Flange repeat bakeout cycles to 400°C
- CF Type Flange vacuum range to below 10^{-11} torr.
- ISO flange intermittent bakeout cycles to 200°C[3]
- ISO flange vacuum range to 10^{-9} torr.

Recommended Maximum Total Current,[4] All Pins Loaded:

1-Pin	8 Amps
2-Pins	10 Amps
4-Pins	20 Amps
6-Pins	24 Amps
8-Pins	32 Amps
10-Pins	35 Amps
12-Pins	40 Amps

Notes:

1. Dimensions are in inches except where noted.
2. Pin lengths are nominal ±1/8.
3. Repeat bakeout cycles will require periodic replacement of O-rings.
4. Current capacity varies with ambient temperature.

Glass Sealed Electrical Feedthrus
.060 Diam. Kovar Standard Conductor Pins

Number of Conductors	Vacuum Seal	Ref	Flange OD	ISO No.	Model Number	P1	G	L	P2
2	• 3/4" Kovar Tube	T	-	-	EF8-2-T-L1	1/2	3/8	2	5/8
	• CF 1-1/3" Flange	F1	1.33	-	EF8-2-F1-L1	1/2	3/8	2-1/8	1/2
	• CF 2-3/4" Flange	F2	2.73	-	EF8-2-F2-L1	1/2	3/8	2-1/8	1/2
	• *Kwik-Flange* K075	K1	1.18	NW16	EF8-2-K1-L1	1/2	3/8	2-1/8	1/2
	• *Kwik-Flange* K100	K2	1.57	NW25	EF8-2-K2-L1	1/2	3/8	2-1/8	1/2
	• *Kwik-Flange* K150	K4	2.16	NW40	EF8-2-K4-L1	1/2	3/8	2-1/8	1/2
4	• 3/4" Kovar Tube	T	-	-	EF8-4-T-L1	1/2	3/8	2	5/8
	• CF 1-1/3" Flange	F1	1.33	-	EF8-4-F1-L1	1/2	3/8	2-1/8	1/2
	• CF 2-3/4" Flange	F2	2.73	-	EF8-4-F2-L1	1/2	3/8	2-1/8	1/2
	• *Kwik-Flange* K075	K1	1.18	NW16	EF8-4-K1-L1	1/2	3/8	2-1/8	1/2
	• *Kwik-Flange* K100	K2	1.57	NW25	EF8-4-K2-L1	1/2	3/8	2-1/8	1/2
	• *Kwik-Flange* K150	K4	2.16	NW40	EF8-4-K4-L1	1/2	3/8	2-1/8	1/2
6	• 3/4" Kovar Tube	T	-	-	EF8-6-T-L1	1/2	3/8	2	5/8
	• CF 1-1/3" Flange	F1	1.33	-	EF8-6-F1-L1	1/2	3/8	2-1/8	1/2
	• CF 2-3/4" Flange	F2	2.73	-	EF8-6-F2-L1	1/2	3/8	2-1/8	1/2
	• *Kwik-Flange* K075	K1	1.18	NW16	EF8-6-K1-L1	1/2	3/8	2-1/8	1/2
	• *Kwik-Flange* K100	K2	1.57	NW25	EF8-6-K2-L1	1/2	3/8	2-1/8	1/2
	• *Kwik-Flange* K150	K4	2.16	NW40	EF8-6-K4-L1	1/2	3/8	2-1/8	1/2
8	• 1" Kovar Tube	T	-	-	EF8-8-T-L1	1/2	3/8	2	5/8
	• CF 2-3/4" Flange	F2	2.73	-	EF8-8-F2-L1	1/2	3/8	2-1/8	1/2
	• *Kwik-Flange* K100	K2	1.57	NW25	EF8-8-K2-L1	1/2	3/8	2-1/8	1/2
	• *Kwik-Flange* K150	K4	2.16	NW40	EF8-8-K4-L1	1/2	3/8	2-1/8	1/2
10	• 1-1/2" Kovar Tube	T	-	-	EF8-10-T-L1	1/2	3/8	2	5/8
	• CF 2-3/4" Flange	F2	2.73	-	EF8-10-F2-L1	1/2	3/8	2-1/8	1/2
	• *Kwik-Flange* K150	K4	2.16	NW40	EF8-10-K4-L1	1/2	3/8	2-1/8	1/2
	• *Kwik-Flange* K200	K5	2.95	NW50	EF8-10-K5-L1	1/2	3/8	2-1/8	1/2
12	• 1-1/2" Kovar Tube	T	-	-	EF8-12-T-L1	1/2	3/8	2	5/8
	• CF 2-3/4" Flange	F2	2.73	-	EF8-12-F2-L1	1/2	3/8	2-1/8	1/2
	• *Kwik-Flange* K150	K4	2.16	NW40	EF8-12-K4-L1	1/2	3/8	2-1/8	1/2
	• *Kwik-Flange* K200	K5	2.95	NW50	EF8-12-K5-L1	1/2	3/8	2-1/8	1/2

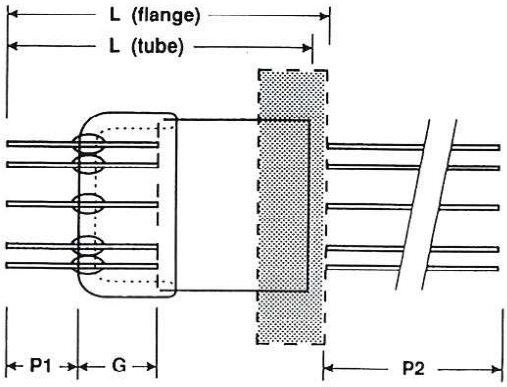


EF8-8-T-L1

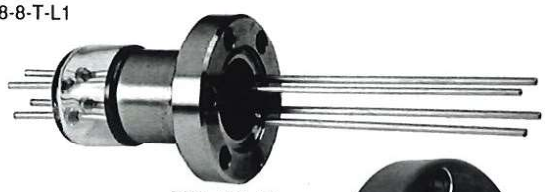
EF8-4-F1-L2

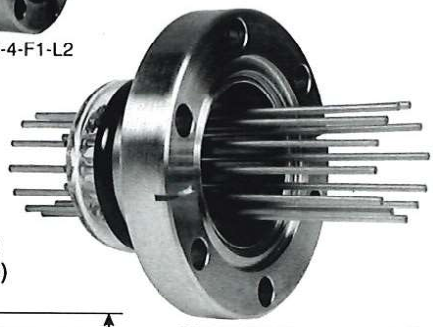
EF8-12-F2-L2


EF8-8-K4-L1

Glass Sealed Electrical Feedthrus
.060 Diam. Kovar Long Conductor Pins

Model Number	P1	G	L	P2
EF8-2-T-L2	1/2	3/8	2	2-1/8
EF8-2-F1-L2	1/2	3/8	2-1/8	2
EF8-2-F2-L2	1/2	3/8	2-1/8	2
EF8-2-K1-L2	1/2	3/8	2-1/8	2
EF8-2-K2-L2	1/2	3/8	2-1/8	2
EF8-2-K4-L2	1/2	3/8	2-1/8	2
EF8-4-T-L2	1/2	3/8	2	2-1/8
EF8-4-F1-L2	1/2	3/8	2-1/8	2
EF8-4-F2-L2	1/2	3/8	2-1/8	2
EF8-4-K1-L2	1/2	3/8	2-1/8	2
EF8-4-K2-L2	1/2	3/8	2-1/8	2
EF8-4-K4-L2	1/2	3/8	2-1/8	2
EF8-6-T-L2	1/2	3/8	2	2-1/8
EF8-6-F1-L2	1/2	3/8	2-1/8	2
EF8-6-F2-L2	1/2	3/8	2-1/8	2
EF8-6-K1-L2	1/2	3/8	2-1/8	2
EF8-6-K2-L2	1/2	3/8	2-1/8	2
EF8-6-K4-L2	1/2	3/8	2-1/8	2
EF8-8-T-L2	1/2	3/8	2-1/8	2-1/8
EF8-8-F2-L2	1/2	3/8	2-1/8	2
EF8-8-K2-L2	1/2	3/8	2-1/8	2
EF8-8-K4-L2	1/2	3/8	2-1/8	2
EF8-10-T-L2	1/2	3/8	2	2-1/8
EF8-10-F2-L2	1/2	3/8	2-1/8	2
EF8-10-K4-L2	1/2	3/8	2-1/8	2
EF8-10-K5-L2	1/2	3/8	2-1/8	2
EF8-12-T-L2	1/2	3/8	2	2-1/8
EF8-12-F2-L2	1/2	3/8	2-1/8	2
EF8-12-K4-L2	1/2	3/8	2-1/8	2
EF8-12-K5-L2	1/2	3/8	2-1/8	2

End Views
(PC: Pin Circle)

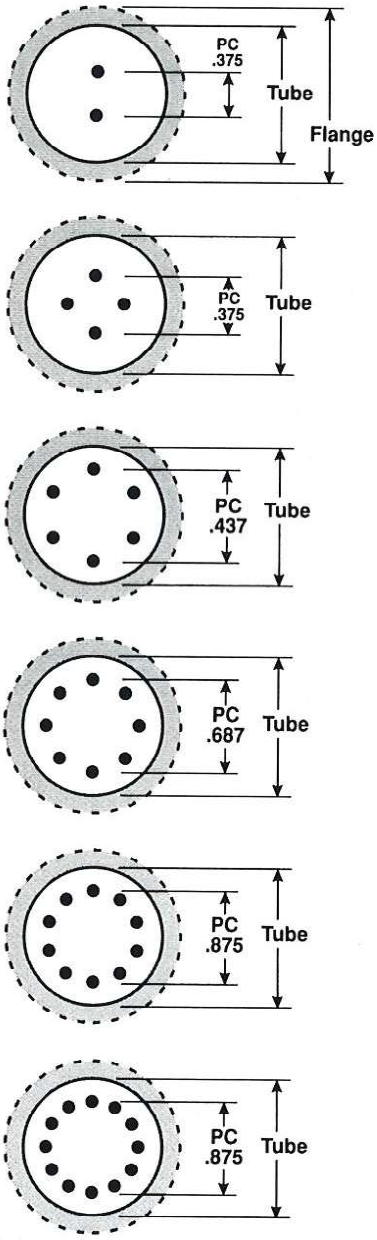

Continued from previous page